CONSUMABLES & TOOLS

FOR PRECISION OPTICS MANUFACTURING

THE ART OF MAKING LENSES

satisloh®

For more than 100 years we have provided optical facilities around the world with precision optical products and equipment. Our approach focuses on the integration of the industry's finest equipment matched with process consumables that ensure optimum results.

Be assured that each item in this catalog is designed and manufactured to maximize the efficiency and performance of your equipment. Our goal is to help give you a competitive edge by optimizing workflow and improving yields.

When choosing consumable products, it's important that the materials are suitable for the machine, they bring optimum results, and the quality is consistent. Be confident that our consumables & tools fulfill these requirements.

For world-class service and more information on our products, contact our customer service department:

consumables@satisloh.com
toolshop_po@satisloh.com

Please note: Availability of certain products may be restricted by local import regulations. Please check with your local Satisloh contact for details.

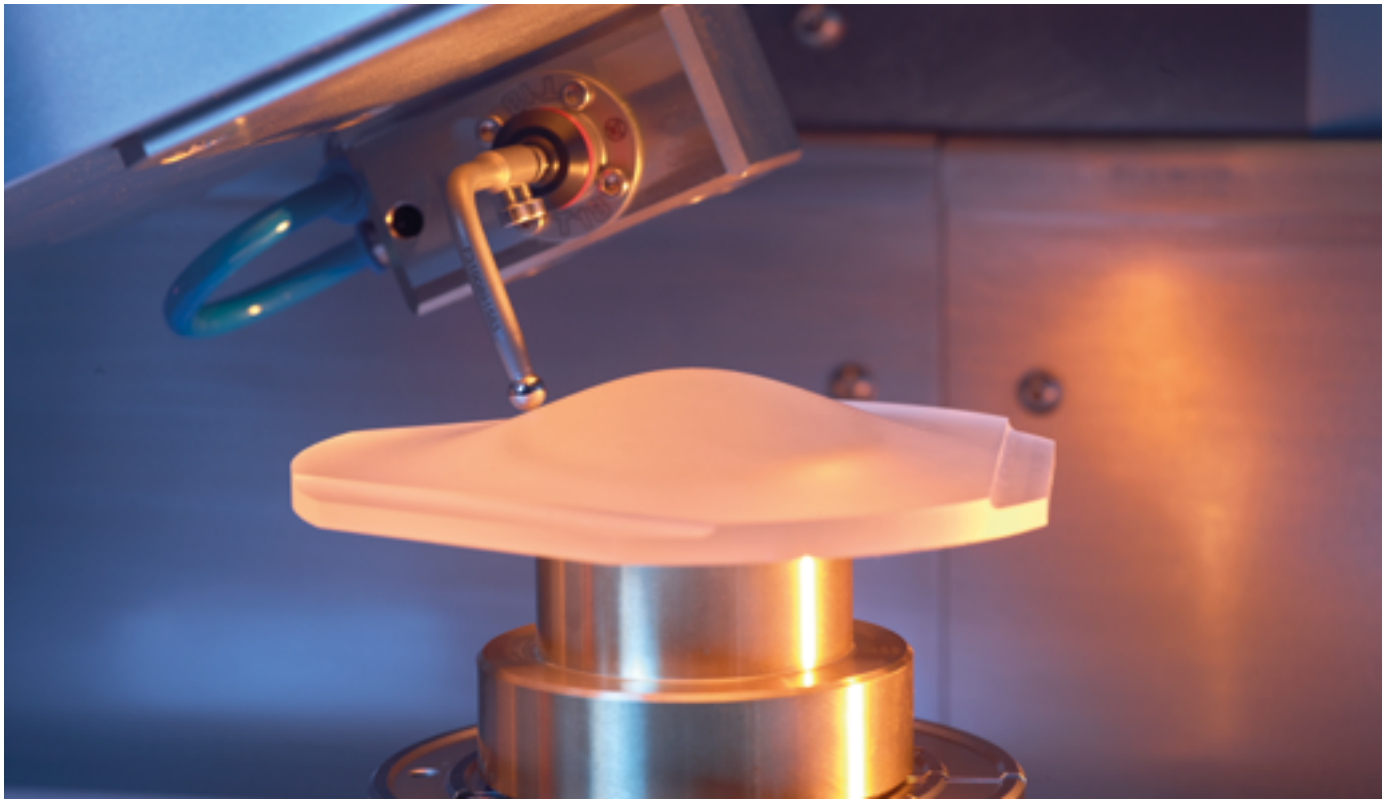

TABLE OF CONTENTS

CONSUMABLES

Coolants | 4

Emeries | 11

Polishing compounds | 14

Polishing support | 21

Cements, UV-cements, adhesives | 26

Protective agents | 31

Cleaning agents | 33

Working aids, equipment | 34

Diamond suspensions, polishing cloths | 36

Coating | 40

AR Coating| 43

ACCESSORIES AND TOOLS

Vacuum chucks | 51

Collet chucks | 54

Polishing chucks with seal lip | 56

Polishing chucks with Membrane | 59

Seal lips | 63

Membranes | 67

Spherical polishing tools | 70

Novotex rof | 70

Aspherical polishing tools | 71

ADAPT tools | 75

ADAPT prime Tools | 79

ADAPT accessories | 80

Centering chucks | 82

Handling accessories | 85

Spherometerrings | 89

Pressure pins PR-150 | 91

Synline | 91

DIAMOND TOOLS

Micro tools | 92

Micro tools with ceramic bond | 93

Micro tools | 95

Diamond tools Hyd.25x42 | 98

Diamond tools HSK-40 | 102

Micro dressing tools | 104

Dressing tools Hyd.25x42 | 105

Centering Wheels | 106

Coolant manifold | 107

Dressing stones | 108

Asphere tools | 109

Ball segment tools | 111

Combitools Hyd.25x42 | 113

Prism tool | 114

Collet chuck holder | 115

Tool adapter Hyd.25x42 | 116

Tool adapter HSK-40 | 118

Tool apapter for polishing tools Hyd.25x42 | 119

WORKPIECE CLAMPING SYSTEM

Workpiece clamping systems | 120

HYDRO EXPANSION CHUCK

Hydro expansion chuck | 124

Bushing for hydro expansion chuck | 125

MEASURING INSTRUMENTS

Measuring devices for height measurment | 126

Gauges | 127

Availability of certain products may be restricted by local import regulations. Please check with your local Satisloh contact for details.

COOLANT ADDITIVE K 40

Water-mixable coolant concentrate, containing mineral oil, for grinding and lapping of optical elements with sintered and electroplated diamond tools in ophthalmic and precision optics.

Technical

- Color: yellow
- pH-value: 9.6 (at 5%)
- Kinematic viscosity: about 1750 (cSt) mm2/s
- Refractometer factor: 1.25

Benefits

- High stock removal
- Excellent surface quality
- Free from chlorine, nitrite, phenol and PCB
- Usable in a wide field of application

Recommendations

- Before switching over from any other coolant additive to K 40, please clean thoroughly machines, tubes, pumping and coolant systems.
- Please check coolant suspension regularly with a hand refractometer, and if necessary, add K 40.
- To avoid foaming, the return tube should be positioned below the coolant surface. If foam still forms, add defoamer E 100.
- Store away from frost.

Applications

Working process	Satisloh diamond tool	Concentration	Temp.
Pre-grinding	wheels – all metal and plastic bonds	6%	<20°C
Pre-grinding	wheels, electroplated bonds	2,5%	<20°C
Pre-grinding	flat-grind tools with toothed smoothing rings	3%	<20°C
Pre-grinding	diamond pellets or segments	3%	<20°C
Formgrinding	electroplated bonds	3%	<20°C
Rounding	rounding tools	3%	<20°C
Sawing	saw blades	5%	<20°C
Lapping	pellets & diamond pads	3%	<20°C
Centering	centering wheels	3%	<20°C
Bevelling	bevel sections	3%	<20°C

Order No.	Product	Unit
92-000-001	Coolant additive K 40	200 kg barrel
92-000-002	Coolant additive K 40	60 kg barrel
92-000-003	Coolant additive K 40	25 kg can
92-000-006	Coolant additive K 40	10 kg can
US only:		
92-000-004	Coolant additive K 40	20 kg can
92-010-286	Coolant additive K 40	1 gal pail

COOLANT ADDITIVE KS 42 VA

Fully synthetic, water-soluble, mineral oil-free cooling lubricant for processing glass.

Technical

- Color: yellow
- pH-value: 40 g/l: ca. 9,3 (DIN 51369)
- Viscosity (20°C): 15-25 mm2/s (DIN 51562)
- Density (15°C): 1,10 g/cm3, equal to TRGS 611
- Refractometer factor: 1,3
- Water hazard classification 1
- Corrosion 3% Note 0 (DIN/ISO 51360/T2)

Benefits

- Excellent lubricating properties which reduces the cutting temperature
- Excellent corrosion protection and machine care properties
- Very low foaming
- Outstanding cooling efficiency thanks to good heat dissipation
- Transparent solution
- Good transport of the glass particles

Recommendations

Before changing over from a different product to KS 42 VA, please thoroughly clean the machinery, supply and return lines, the pumps and the coolant unit. The operating solution is prepared by slowly pouring the additive into potable water while simultaneously stirring thoroughly or using an automatic mixer. Recommended mixing ratio: 2-5%

Applications

KS 42 VA is used for milling, drilling, grinding and lapping of optical, technical and medical optics.

Order No.	Product	Unit
92-005-063	Coolant additive K 42 VA	25 kg can

COOLANT ADDITIVE K80

- Water-soluble coolant, free from mineral oil, offering excellent cutting properties.
- Low foaming when keeping to the recommended concentration percentage.

Water-soluble coolant, free from mineral oil, offering excellent cutting properties. Low foaming when keeping to the recommended concentration percentage.

Technical
- Color: Light brown
- pH value: 9.3 (at 5%)
- Refractometer factor: 1.2
- Recommended concentration: 3 – 5%

Benefits
- Free from chlorine, phenols and formaldehydes, nitrite, PCB/PCT/PTBB, silicon and other dangerous and/or raw materials subject to marking, free from Raw materials with an own MAK value
- High anticorrosive reserve
- Good settling of glass residues
- Clean, transparent grinding results
- Minimum aerosol forming
- Optimum machine maintenance
- No dangerous or physiologically harmful
- High efficiency.

Recommendations
- Before changing to K 80, machines, lines, pumps and coolant tanks should be cleaned thoroughly.
- Coolant concentration should be tested regularly with a manual refractometer.
- To avoid foaming in the coolant reservoir, the return tube should be placed beneath the surface of the coolant.
- In case of persistent foaming, use Satisloh Defoamer MP Item no. 92-005-078
- Keep away from frost.

Order No.	Description	Unit
92-000-013	Coolant additive K80	237 kg barrel
92-000-015	Coolant additive K80	29 kg can

COOLANT ADDITIVE KS 3000

Full synthetic coolant additive.
Clear, light-yellow color

Technical

- pH-Value: 9,3-9,8
- Specific Gravity [kg/l] (20°C): 1,05
- Refractometer Factor: 2,5
- Freeze Point: 0°C

Benefits

- Contains high amount of lubrication components
- Corrosion inhibited
- High biological protection
- Mineral oil free

Recommendations

- Recommended grinding temperature: 20°C
- Mixing ratio: 3-5%

Applications

KS 3000 is a coolant that is ideal for grinding/smoothing of hard materials like technical ceramic and quartz materials.

Storage:

- Please store cool and dry; do not expose to direct sunlight, beware of freezing

Please follow the instructions in the material safety data sheet!

- The data are not to be interpreted as a specification or guarantee of properties.
- No implied warranties as to its accuracy and assumes no liability arising out of its use by others

Order No.	Product	Unit
92-016-729	Coolant Additive KS 3000	5 gal pail
92-016-666	Coolant Additive KS 3000	1 gal pail

COOLANT LH-105

North America Only!

Synthetic coolant ideal for finishing of precision and technical optical surfaces.

Technical
- Color: clear blue liquid
- pH-value: 9.3 – 9.8

Benefits
- Increase tool life
- Improve Surface Finish 20-30%
- Reduced Cycle Time, More Parts per Shift
- High levels of Biological Protection
- Fully Synthetic and Waste Treatable
- Will not affect most waxes

Recommendations
A highly contemporary corrosion protection package that protects both ferrous and nonferrous metal substrates. LH-105 is non-petroleum based grinding fluid, able to be easily integrated into the existing plant production equipment and is highly waste treatable.

Applications
LH-105 is used for milling, drilling, grinding and lapping of optical, technical and medical optics.

Order No.	Description	Unit
92-011-322	LH 105 Plus	55 gal drum
92-011-328	LH 105 Plus	5 gal pail

COOLANT CENTERING OIL K 43

Technical

- Color: clear
- Viscosity (40°C): 4.8 mm2/s
- Water hazard classification: WHC 1
- pH-Value: ca.7,0

Benefits

- Free from chlorine, nitrite, phenol and PCB

Recommendations

- Please install oil vapour exhauster

Applications

Working process	Diamond tool	Concentration
Centering	centering wheels	pure
Bevelling	beveling wheels	pure

Order No.	Product	Unit
92-000-027	Coolant Oil K 43	30 l can
92-000-026	Coolant Oil K 43	208 l barrel

A mineral oil for processing optical elements in precision optics if water soluble coolants cannot be used due to higher demands.

ANTIFOAMING AGENTS

Benefits

- Silicone free

Applications

Antifoam	Recommended for Coolants	To be added to 100 litres of the suspension
E 100	K 40	0.5 – 1 l
MP	all synthetic coolants	0.6 l

Order No.	Product	Unit
92-000-658	E 100	1 kg bottle
92-000-657	E 100	10 kg can
92-005-078	MP	1 kg bottle
92-005-079	MP	10 kg can
92-010-383	Super LohFoam 10	1 gal box

Anti-foam agents are destined for coolant, polishing and smoothing suspensions in ophthalmic and precision optics.

BIOCLEAN PLUS TANK CONDITIONER

North America Only!

Tank side microbial control additive

Technical

- Functional pH operating range: 8-12
- Non-volatile chemistry

Benefits

- Works very well at low concentrations and is highly dilutable
- Keeps biological activity in check and keeps pH in a safe, non-hospitable range for biological growth
- Works well in hard water conditions up to 400-600 ppm in dilute form
- Compatible with anionic, cationic, and non-ionic compounds. Will not interfere with the functionality of materials such as flocs or coagulants.

Recommendations

Simply identify the tank size in questions and add BioClean Plus Tank Conditioner at a dilution rate of 50:1; for example, one gallon of BioClean Plus Tank Conditioner for every 50 gallons of sump capacity. Add BioClean Plus Tank Conditioner to the coolant tank at the 50:1 dilution on a quarterly basis to ensure continual product performance, and whenever replacing the coolant charge in the tank system.

Applications

BioClean Plus Tank Conditioner is a highly effective tank side conditioner for both synthetic coolants and soluble oils. It can be used in grinding applications as well as machining. It is very useful in eliminating foul odors caused by microbial growth and excessive tramp oil contamination.

Order No.	Product	Unit
92-010-458	BioClean Plus Tank Conditioner	1 gallon
92-011-389	BioClean Plus Tank Conditioner	5 gallon

SILICON CARBIDE EMERY SCDL DARK AND GREEN

Technical
Available: in grit sizes from F80 – F1200

Benefits

The SIC, being dark colored due to inclusions and oxides, has a particularly high toughness, whereas the high purity green SIC is harder and shows better splintering properties.

Recommendations

As an initial concentration Satisloh recommends 400- 450 grams per litre of water. In order to get optimum result in circular lubrication we recommend to add 2- 5 grams of wallpaper glue on 1 litre of water. Better suspension properties of the grits can be achieved by this.

Applications

LH-105 is used for milling, drilling, grinding and lapping of optical, technical and medical optics.

Emery made out of glass sand and coal with additives for processing optical elements in the precision optics.

Macro grits				Micro grits	
DIN Description	Middle grit size (mm)	DIN Description	Middle grit size (mm)	DIN Description	Grit size (µm)
F 4	5.600- 4.000	F 36	0.600- 0.425	F 230	82.0- 34.0
F 5	4.750- 3.335	F 40	0.500- 0.355	F 240	70.0- 28.0
F 6	4.000- 2.800	F 46	0.425- 0.300	F 280	59.0- 22.0
F 7	3.350- 2.360	F 54	0.355- 0.250	F 320	49.0- 16.5
F 8	2.800- 2.000	F 60	0.300- 0.212	F 360	40.0- 12.0
F 10	2.360- 1.700	F 70	0.250- 0.180	F 400	32.0- 8.0
F 12	2.000- 1.400	F 80	0.212- 0.150	F 500	25.0- 5.0
F 14	1.700- 1.180	F 90	0.180- 0.125	F 600	19.0- 3.0
F 16	1.400- 1.000	F 100	0.150- 0.106	F 800	14.0- 2.0
F 20	1.180- 0.850	F 120	0.125- 0.090	F 1000	10.0- 1.0
F 22	1.000- 0.710	F 150	0.106- 0.063	F 1200	7.0- 2.5
F 24	0.850- 0.600	F 180	0.090- 0.053	by 80%	
F 30	0.710- 0.500	F 220	0.075- 0.045		

Order No.	Description
92-000-047	SCDL 80 silicon carbide dark
92-000-048	SCDL 120 silicon carbide dark
92-000-049	SCDL 150 silicon carbide dark
92-000-050	SCDL 180 silicon carbide dark
92-000-051	SCDL 220 silicon carbide dark
92-000-052	SCDL 240 silicon carbide dark
92-000-053	SCDL 280 silicon carbide dark
92-000-054	SCDL 320 silicon carbide dark
92-000-055	SCDL 360 silicon carbide dark
92-000-056	SCDL 400 silicon carbide dark
92-000-057	SCDL 500 silicon carbide dark
92-000-058	SCDL 600 silicon carbide dark
92-000-059	SCDL 800 silicon carbide dark
92-000-060	SCDL 1000 silicon carbide dark
92-002-332	SCDL 1200 silicon carbide dark

Order No.	Description
92-000-063	SCG 320 siliciumcarbide Green
92-000-064	SCG 400 siliciumcarbide Green
92-000-065	SCG 500 siliciumcarbide Green
92-000-066	SCG 600 siliciumcarbide Green
92-000-067	SCG 800 siliciumcarbide Green
92-000-068	SCG 1000 siliciumcarbide Green

Packing unit: 25 kg sack

EMERY LS SERIES

Technical
Different types with grain sizes between 6 and 40 µm available.

Benefits

- Scraping material removal
- Plane shape crystals enlarge the working surface
- High stock removal
- Minimum surface roughness
- Short cycle times
- Minimised process steps
- Minimum consumption of abrasives

Recommendations

- LS should be used with the same concentration as previously used emery. In order to benefit from high stock removal rates it makes sense to find an optimum between desired removal rate and a reduced fraction of LS with the lapping suspension.
- We recommend starting with a concentration of 300 – 500 g/l.

Highly sintered clay (aluminium oxide Al2O3) for lapping optical components with loose grain. Due to a special production process emeries LS get a disc like shape. LS emeries are especially successful in cases where working with diamond tools is not efficient due to limited–lot productions.

Macro grits				Micro grits	
DIN Des-cription	Middle grit size (mm)	DIN Des-cription	Middle grit size (mm)	DIN Des-cription	Grit size (µm)
F 4	5.600- 4.000	F 36	0.600- 0.425	F 230	82.0- 34.0
F 5	4.750- 3.335	F 40	0.500- 0.355	F 240	70.0- 28.0
F 6	4.000- 2.800	F 46	0.425- 0.300	F 280	59.0- 22.0
F 7	3.350- 2.360	F 54	0.355- 0.250	F 320	49.0- 16.5
F 8	2.800- 2.000	F 60	0.300- 0.212	F 360	40.0- 12.0
F 10	2.360- 1.700	F 70	0.250- 0.180	F 400	32.0- 8.0
F 12	2.000- 1.400	F 80	0.212- 0.150	F 500	25.0- 5.0
F 14	1.700- 1.180	F 90	0.180- 0.125	F 600	19.0- 3.0
F 16	1.400- 1.000	F 100	0.150- 0.106	F 800	14.0- 2.0
F 20	1.180- 0.850	F 120	0.125- 0.090	F 1000	10.0- 1.0
F 22	1.000- 0.710	F 150	0.106- 0.063	F 1200	7.0- 2.5
F 24	0.850- 0.600	F 180	0.090- 0.053	by 80%	
F 30	0.710- 0.500	F 220	0.075- 0.045		

Order No.	Description	
92-000-033	LS/Plakor 6 aluminium oxide with floating agent	6 µm
92-000-034	LS/Plakor 9 aluminium oxide with floating agent	9 µm
92-000-035	LS/Plakor 12 aluminium oxide with floating agent	12 µm
92-000-036	LS/Plakor 15 aluminium oxide with floating agent	15 µm
92-000-037	LS/Plakor 20 aluminium oxide with floating agent	20 µm
92-000-041	LS/Plakor 20 aluminium oxide without floating agent	20 µm
92-000-038	LS/Plakor 25 aluminium oxide with floating agent	25 µm
92-000-039	LS/Plakor 30 aluminium oxide with floating agent	30 µm
92-000-040	LS/Plakor 40 aluminium oxide with floating agent	40 µm

Packing unit: 25 kg cardboard box

EMERY LS SERIES

General notes from manufacturer of emery:

- When filling in conventional abrasives such as fused AL2O3 or SIC start with half the amount of abrasive.
- Stir the abrasive into the water. Not the other way round.
- Warm water will aid mixing.
- Allow sufficient time for thorough mixing and wetting the particles before start lapping operations .
- Because of the big surface area thorough wetting is most important as other wise agglomerates will remain.
- Agglomerates cause scratches!
- As the mixture loads with glass and metal particles ad only water to maintain the proper consistency. When the cutting rate finally does markedly decrease, clean and recharge the system.

LS – emery suspension (with floating agent)
Mixing is everything

Brush feed: Slurry mixture by weight
3 parts water – 1 part emery

Once through Systems: Slurry mixture by weight
4 parts water – 1 part emery

Recirculation Systems: Slurry mixture by weight
5 parts water – 1 part emery

DIAMOND PELLETS

- Diameter range: 4–30 mm
- Thickness range: 2–20 mm
- Grit sizes available: 2–184 µm
- Additional grit sizes available on request
- Standard concentrations: C30 and C50
- Custom concentrations available on request
- Shape: Round
- Bond types available: Plastic, hybrid, ceramic, stainless steel, or metal-bonded diamond pellets

CERIUM OXIDE POLISHING COMPOUNDS

Technical

Detailed data sheets available on request.

Benefits

Quality control: All batches are checked before delivery with the regard of the four main criteria, i.e. hardness, grit size, suspension properties and polishing efficiency.

Recommendations

- Before changing over from any other polishing compound to Satisloh polishing compounds machine tubes, pumping and polishing systems have to be cleaned thoroughly.
- In order to avoid glass particles or other pollution getting into circulation, the polishing slurry should be filtered. e.g. with our filter tissue for polishing compounds or a nylon stocking which is placed at the return piping.

Applications (mineral glass)

Polish	Polishers	Pressure (bar)	Revolution (r.p.m.)	Fields of application
Opaline	Polishing pitch Plano Polishing Disc Polish supports KR and LR	> 0.25	5 – 180	Precision optics
SuperCerox 1663	Polishing pads: Standard Polyurethane 166, 126, 146 Multipol	0.8 – 1.5	800 – 3000	Ophthalmic RX-production Mass production Bifo-production
SuperCerox 1663 Cerox 1650	PU-foils 166, 126, 135, 125	0.8 – 1.5	400 – 3000	Plano optic Round optics Fibre optic
Cerox 1670	Polishing felt Synth. Felt Soft PU-foils 126, 146	0.25 – 0.8	180 – 400	Mirror bevels Flat glass Crystal glass

Water-mixable polishing compounds based on cerium oxides made from rare earths for the polishing of optical elements. The polishing compounds have to get mixed with water.

POLISHING COMPOUND CEROX

Concentration / Polishing Temperature:

Apart from pressure and polishing speed, these are important parameters for a constant polishing quality. Both should be regularly checked with an aerometer and a thermometer.

Polish	Concentration per l/water	Temperature (°C)
Cerox 1650 / 1670	100 – 140 g	20- 25°
SuperCerox 1663	60 – 80 g	20- 25°
Opaline	100 – 120 g	20- 25°

Order No.	Description	Packing unit
92-000-121	Cerox 1650	20 kg carton
92-000-122	SuperCerox 1663	20 kg carton
92-007-032	Cerox 1670	20 kg carton
92-000-124	Opaline	20 kg pail

POLISHING COMPOUND CE 480 ST

Technical

- Color: beige / white
- pH – value: 6,5
- Medium grit size 1,0 µm
- CeO2: > 95%

Benefits

- Ready to use – no additional preparation necessary
- Perfectly suited for the highest surface quality requirements
- Designed for easily scratched, soft materials

Applications + Recommendations

- The polishing suspension can be diluted at a ratio of 1 : 10 (depending on the polishing process)
- Store and transport frost-free. Freezing of the suspension can impair its polishing properties.

Ready-mixed, stabilized cerium oxide polishing suspension for the highest surface quality requirements

Order No.	Description	Packing unit
92-000-129	CE480	gallons per carton

POLISHING COMPOUND CE 600 T LIQUID

Technical

- Color: creme-white
- pH-value: 7,9
- Density: 1,02 g/cm³
- Viscosity: 11s 4mm
- DIN 53211

Benefits

- A combination of high stock removal in conjunctions with high surface quality requirements
- The suspension has been optimized with regard to its floating properties
- Agglomerate-free
- Can be diluted at a ratio of up to 1:7
- No scratches on soft lenses

Applications + Recommendations

- Before filling, the system should be thoroughly cleaned and flushed out with clean water.
- Fill the tank with municipal water or distilled water and add CE 600 T Liquid at the required mixing ratio
- Store and transport frost-free. Freezing of the suspension can impair its polishing properties.

Polishing suspension specially made for polishing surfaces to the highest quality. Ready to use, stabilized and agglomerate-free, white cerium oxide polishing suspension

Order No.	Description	Packing unit
92-004-425	CE 600 T liquid	5 kg can

POLISHING COMPOUND HASTILITE PO

Technical

- Color: beige / white
- pH – value: 6,0-7,0
- Medium grit size: 0,8 µm
- CeO2: > 95%

Benefits

- Ready to use – no additional preparation necessary
- Perfectly suited for the highest surface quality requirements

Applications

- The polishing suspension can be diluted at a ratio of 1 : 10 (depending on the polishing process)

Recommendation

- Store and transport frost-free. Freezing of the suspension can impair its polishing properties.

Order No.	Description	Packing unit
92-003-838	Hastilite PO	gallons per carton

Ready-mixed, stabilized cerium oxide polishing suspension for the highest surface quality requirements

POLISHING COMPOUND CR 6, 15A, 85B/ POLY-PRO

Technical

CR 6

- Color: white
- Grit size: from D20-D90 0.30 µm up to 1.50 µm

CR 15A

- Color: white
- Grit size: from D20-D90 0.20 µm up to 0.90 µm

CR 85B

- Color: white
- Grit size: from D20-D90 0.20 µm up to 0.70 µm

Benefits

- High purity

Recommendations

- Before changing over from any other polishing compound to polishing compound CR 6 / 15A / 85B, machines, tubes, pumping and polishing system have to be cleaned thoroughly.
- In order to avoid glass particles or other pollution getting into circulation, the polishing slurry should be filtered, e.g. with our filter tissue for polishing compounds or a nylon stocking which is placed at the return piping.

Order No.	Description		Packing unit
92-000-126	CR 6 aluminium oxide	0,6 µm	2 kg pail
92-000-127	CR 15A aluminium oxide	0,45 µm	2 kg pail
92-000-128	CR 85B aluminium oxide	0,35 µm	0,5 kg pail
92-005-541	PolyProAllformat		

An aluminium-oxide water-mixable polishing powder of high purity (99%, min. 98%) for the final polishing of special materials in precision optics such as: germanium, silicon, zinc selenide, zinc sulfide, galium arsenide, cadmium sulfide, all kinds of metals, medical artificial limbs, resin surface, acrylics, ceramic substrates.

Premium polish for one-step polishing process.

POLISHING COMPOUND SY 30 - 85

Technical

- Particle size: approx.125 nm
- Specific surface: 80 m2/g
- SiO2-quota: 30%
- Na2O-quota: 0.13%
- Relation SiO2/Na2O: 230
- pH-value at 20°C: 10.2
- Specific weight at 15.5°C: 1.20 g/ccm
- Viscosity at 20°C: 2.5 mPa-s
- Appearance: milky, thin liquid
- Quantities supplied: 50-l-barrel

Benefits

- SY 30-85 can be thinned very easily with distilled water or fully desalted
- water to get any desired concentration.

Recommendation

- It can furthermore be mixed with water-soluble acids (except hydrofluoric acid) and with ammonia as well as most of the amines.
- SY 30-85 is compatible with many watery dispersions, e.g. melamine urea, phenolic resin, PVA-adhesives, starch, etc.

A ready-mixed polishing compound based on silicic acid / alu oxide for chemical polishing of sapphire using our polishing supports Policor or Mambo.

Order No.	Description	Packing unit
92-000-138	SY 30-85	50 l barrel

POLISHING COMPOUND OXIDE 112-O WHITE

Technical

- Color: creme-white
- pH-value (25 %): 5.0- 7.5
- Average grit size:
- D50 : 1.0 – 1.5 µm
- D3 : 4.0 µm
- Analysis: Zr-Oxide and Fe-Oxide

Recommendations

- Before changing over from any other polishing compound to Satisloh Oxicon, machines, tubes, pumping and polishing system have to be cleaned thoroughly.
- In order to avoid glass particles or other pollution getting into circulation the polishing slurry should be filtered, e.g. with our filter tissue for polishing compounds or a nylon stocking which is placed at the return piping.
- It is recommended to „pre-soak“ Oxicon for about 24 hours before filling into the machine and then to „pre-polish“ for about 8 hours. This will destroy any existing agglomerates.

Order No.	Description	Packing unit
92-000-132	Zirconium Oxide Oxicon 112-O white	20 kg pail

Zirconium Oxide Oxicon 112-O white, a water-mixable compound powder, for pre-polishing optical elements in precision optics.

POLYURETHANE POLISHING FOIL

Technical

- Polyurethane polishing foil is available in sheets of 580 x 1400 mm
- Thickness from 0.51 mm up to 25.4 mm
- Further configurations on request
- Furthermore possible: cutting in special geometrics
- Quantities supplied: sheets or single polishing discs

Benefits

- Available with or without filling material (cerium oxide or zirconium oxide)
- Filling material independent from polish

Recommendation

- Satisloh recommends using either Pattex as an adhesive for polyurethane as per the directions given on the adhesive package.
- In order to secure constant polishing results we recommend roughing the foils from time to time with a soft file brush.

A film micro-cell polyurethane foam for the polishing of glass in precision optics and ophthalmic, ceramics, pick-ups, screens, seals, quartz crystals, illumina-tion optics, etc.

Type of tape	Color/Filler	Hard-ness Shore „D“	Application	Ophthalmic: O Precision optics: P
113	cerium oxide	13- 19	glass sensitive to scratches crystal glass surfaces	P
125	grey unfilled	25- 33	color filter, reticles	P
126	pink zirconium oxide	33- 43	mass production (spherical) round optics, illumination optics, flat glass/mirror glass	O O P P
135	grey zirconium oxide	33- 43	round optics, micro optics, plano substrates	P P
146	light green zirconium oxide	20- 30	multifocal lenses (concave) sapphire, illumination optics TV screens	O P
157	white unfilled	30- 40	round optics for cameras microscopes, telescopes etc. laser optics	P P
166	red-brown cerium oxide	20- 30	special glasses (bulbs) round optics for cameras, binoculars, microscopes all kinds of plano optics illumination optics quartz crystals flat glass/bevel polishing moulds processing	P P P P P O
177	medium brown cerium oxide	22- 37	semi-conductors, magnet heads, quartz glass, laser optics	P
187	salmon-pink unfilled	45- 50	crystal glass gem processing	P
188	light-brown cerium oxide	60- 67	fibre optics crystal glass bevels	P
Laser	white		LP laser	P
26D	purple		LP 26D, filled with diamond for processing of GE, SI	P

The foils are available in the following thicknesses:
0.51 mm
0.81 mm
1.02 mm
1.27 mm
1.52 mm
2.03 mm
2.54 mm
3.00 mm
3.18 mm
3.96 mm
4.75 mm
6.35 mm
12.7 mm
25.4 mm

Further information on request.

POLISHING FOIL POLICOR

Technical

- Policor polishing foil is available in sheets of 890 x 890 x 1.15 mm.

Benefits

- Excellent polishing results

Recommendations

- Policor polishing foil is usually stuck to tools with Pattex.
- The final polishing of silicon, germanium, zinc selenide, gallium arsenide is made with pitch as a polishing compound carrier (see polishing compound CR 6/15A/85B).

Order No.	Description	Packing unit
92-000-246	Polishing foil Policor	890 x 890 x 1.15 mm, sheets

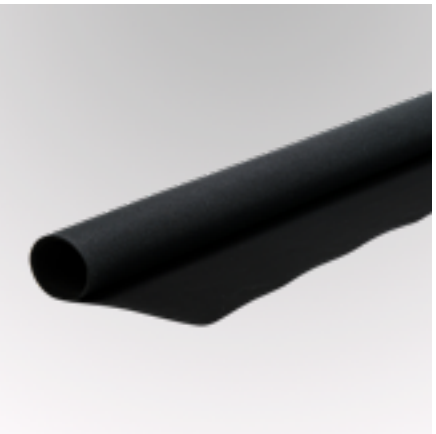

A velvety special polishing cloth for polishing special materials such as silicon, germanium, zinc selenide, gallium arsenide, special steel, special metals, ceramics, plastic (acrylic glass) etc.

POLISHING FELTS

Technical

- Polishing felt:
  Natural polishing felt, ground on both sides, medium hardness, for polishing in conjunction with cerium polishing compounds
  Color: white, grey

Order No.	Description	Packing unit
92-000-242	Natural Felt 100	1000 x 1000 x 1 mm, 1pc
92-000-243	Natural Felt 300	1000 x 1000 x 3 mm, 1pc
92-000-244	Natural Felt 1000	1000 x 1000 x 10 mm, 1pc

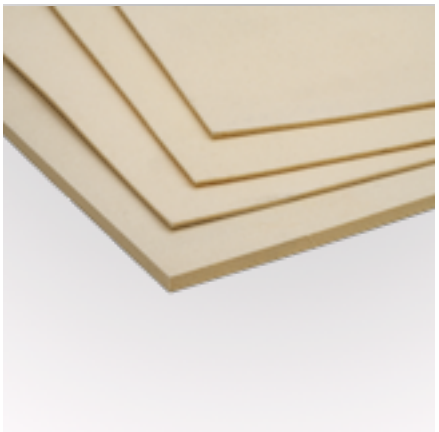

A natural polishing felt, ground on both sides, medium hardness, for polishing in conjunction with cerium polishing compounds.

POLISHING DISC KR AND LR

Technical

- Available in round discs of 123 mm in diameter
- Polishing Disc LR-05 with longitudinal profile + polishing compound SuperCerox 1663 for pre-polishing plano optics
- Polishing Disc KR-05 with cubical structure + polishing compound OPALINE for finish polishing spheres

Benefits

- Excellent polishing results
- Highly abrasion-resistant

Recommendation

- Cutting out Polishing Disc KR and LR: Star-shaped, in segments or pieces. Parallel lines have to be arranged radially if possible. Make small round discs for big lenses and big discs for small lenses. They have to be arranged in sectors, if necessary with an additional circle for large diameters (more than 200 mm).
- Grind-in the tool with emery SCDL 320

A polishing compound carrier of durable plastic with ribbed surface for polishing of plano surfaces and round optics in precision optics.

Order No.	Description	Packing unit
92-000-154	Polishing Disc KR	KR-05 123 mm
92-000-152	Polishing Disc LR	LR-05 123 mm

POLISHING PITCH

A polishing compound carrier based on wood tar resins, fatty acids, phenols and resin acids for polishing high precision optical elements in precision optics.

Technical

- Softening points:
  Measuring method: ISO 4625
  Measuring tool: ring and ball
  no. 55 63-65°C
  no. 64 64-68°C
  no. 73 70-74°C
  no. 82 73-77°C
  no. 91 78-93°C

- Penetration:
  Measuring method: DIN / ISO 52010
  Measuring tool: with needle
  Measuring time: 5 s
  Measuring temperature: 20°C
  Stress on needle: 50 g
  no. 55 1.51 – 1.83 mm
  no. 64 0.31 – 0.55 mm
  no. 73 0.03 – 0.10 mm
  no. 82 0.00 – 0.07 mm
  no. 91 0.00 – 0.04 mm

Recommendations

- The applicability of a polishing pitch depends on the polishing method, the ambient temperature and its softening qualities and fusibility. Polishing method mainly means the so-called cold polishing with circular lubrication and warm polishing with brush lubrication. The solidifying point should be slightly above the ambient temperature, the softening point (begin of plastic deformation) must not exceed the solidifying point by more than 5°C. The melting point should be by 30-50°C higher than the softening point.
- The pitch has to be flexible which is achieved by the influence of the polishing temperature. The pitch, however, has to be hard and brittle to achieve the required form exactness when polishing. In working practice the polishing pitch is slightly warmed up in order to fit the optical element. The pitch tool is then chilled by applying cold polishing compound (approx. 20°C) so that subsequent polishing takes place in the newly adjusted form.
- 92-000-814 lime wood flour as polishing additive for pitch

Applications

Recommended polishing compounds:
Cerox 1650: round optics
> 3 Newton rings: plano optics
Opaline: round optics
< 3 Newton rings: plano optics
CR6 / CR15 / CR85: special optics, e.g. silicon, germanium, zinc selenide, gallium, arsenide

Order No.	Description	Packing unit
92-000-250	Polishing Pitch No. 55	1 kg tin
92-000-251	Polishing Pitch No. 64	1 kg tin
92-000-252	Polishing Pitch No. 73	1 kg tin
92-000-253	Polishing Pitch No. 82	1 kg tin
92-000-254	Polishing Pitch No. 91	1 kg tin

SYNTHETIC POLISHING COMPOUND CARRIER ACCULAP®

Technical

- Soft: hardness 9
- Standard: hardness 30
- Very firm: hardness 60

Benefits

- High purity
- Precision formulated
- Non-drying
- Ultra consistent

Recommendation

- Acculap® polishing compound carriers dominantly comprise styrenic polymers and consequently are highly stable against chemical attack, including high temperature oxidation or degradation. Suspensions containing alcohol can be used for polishing.
- Acculap® polishing compound carriers are not immediately water wetting. As polishing begins, however, wetting of the lap occurs quickly as slurry particles embed in the pitch surface.
- Warm or cold pressing with slurry will accelerate charging.

These polishing compound carriers have been especially designed for use in precision optics showing extremely stable and consistent properties.

Polishing characteristics:
Once charged, under given lapping conditions, Acculap® will polish much like natural pitch of comparable hardness. Just as with natural pitches, periodic dressing and trimming of the lap, as well as replacement of slurry, will be required.

Cementing characteristics
The Acculap is also useful as an optical cement. It is very homogeneous and can be applied in very thin layers.

Applications
In general, Acculap® polishing compound carriers are poured near 135°C (similar to natural pitch). At this temperature, Acculap® spreads and pours easily. Acculap® bonds well to most materials, particularly surfaces warm prior to application. Aggressive bonding is facilitated by pretreatment of surfaces with a coat of Acculap® dissolves in acetone. Once poured, Acculap® is somewhat more brittle than natural pitches, leading to some differences in channelling. Typically, however, only minor refinement of technique is needed to achieve excellent results. Sharp blades and fast cutting speeds work best.

Order No.	Description	Packing unit
92-007-334	Synthetic polishing compound carrier Acculap® HA 9	0.333 kg
92-007-335	Synthetic polishing compound carrier Acculap® HA 30	0.333 kg
92-007-336	Synthetic polishing compound carrier Acculap® HA 60	0.333 kg

OPTICAL CEMENTS

Recommendations

The customer himself chooses the type of cement he needs because very different criteria have to be considered such as stress susceptibility of the optical elements, rising temperatures during polishing, cementing procedures, thickness of the cement coating, required resistance to oil, procedure of decementing and cleaning. Following our own experience and that of our customers we are, however, in a position to make recommendations for the different applications. As we deal with natural products variations cannot be excluded. However, these variations are within the range of toleration of the manufacturer.

Ready-made optical cements of different compositions for cementing optical elements onto loose and fixed tools in precision optics, micro optics and plano optics.

Order No.	Product	Melting point	Oil resistance	solubility	Main components	Application	Packing unit
92-000-418	Rounding cement red	approx. 75°C	limited oil resistance	not spirit soluble	colophonium shellac earth-spars	rounding	sticks 20 x 1.5 x 1 cm
92-000-413	Cement sealing wax brown No. 300	approx. 65°C	not oil resistant	spirit soluble	colophonium shellac earth-spars	plano optics and big lenses pitch malleting	plates 39 x 18.5 x 3,5 cm
92-000-414	Cement sealing wax black No. 13	approx. 70°C	limited oil resistance	spirit soluble	colophonium earth-spars resin	plano optics and big lenses pitch malleting	bars 18.5 x 5 x 3.5 cm
92-000-415	Cement sealing wax black No. 2	approx. 70°C	limited oil resistance	not spirit soluble	colophonium shellac earth-spars	small and medium size lenses	sticks 20 x 1.5 x 1 cm
92-000-416	Cement sealing wax black No. 1	approx. 70°C	limited oil resistance	not spirit soluble	colophonium shellac earth-spars	micro optics	sticks 20 x 1.5 x 1 cm
92-000-417	Cement sealing wax black No. 9 b/soft	approx. 50°C	limited oil resistance	limited spirit solubility	colophonium shellac earth-spars	micro optics	sticks 20 x 1.5 x 1 cm
92-000-421	Special cement sealing wax C/15 black	approx. 55°C	not oil resistant	spirit soluble	colophonium resinwax	plano optics big lenses sawing	bars 18.5 x 5 x 3.5 cm
92-002-532	Special cement C/30 Yellow mat	approx. 40°C	limited oil resistance	limited spirit solubility	colophonium wax	plano optics sawing	bars 18.5 x 5 x 3.5 cm
92-000-420	Special cement C/20 II yellow	approx. 40°C	limited oil resistance	limited spirit solubility	colophonium wax	plano optics sawing	sticks 20 x 1.5 x 1 cm
92-000-407	Colophonium	80-125 °C	well soluble in oil	spirit soluble	colophonium	component	50 kg

SYNTHETIC CEMENT ULTRA-SK

Technical

- Initial concentration:
- Synthetic resin SK: 2 parts
- Ultramoll III: 1 part

Benefits

- For cementing plano substrates susceptible to tension we recommend to:
- Make grooves of about 1 mm of depth into the carrier plate (either in spirals or of cube structure) so that the cement can come out without difficulties and to ensure a thin and even cementing layer.
- Place silk paper onto the warm cementing layer and brush once again with the warmed cement compound. After that press the pre-warmed plano substrates. This will protect the polished surface from damages and avoid any contact to metals.
- Soluble in organic solutions

Recommendation

- This cement is mixed by the user himself.
- Melting temperature depending on mixture, about 100-120°C

Order No.	Description	Packing unit
92-000-409	Synthetic resin SK	25 kg sack

A synthetic acid-free resin for cementing optical elements on loose and fixed tools in precision optics, micro optics and plano optics. This product is of low tension, does not leave spots on the polished surfaces when de-blocked and has a limited oil resistance.

CEMENTING FOIL

Technical

- Width of roll: 30 cm
- Length of roll: approx. 60 m
- Thickness of tissue: approx. 0.22 mm
- Packing: per meter (on rolls)

Benefits

- No metal contact of the lens with the multiple blocks which minimizes restraints
- The artificial resin coming out while cementing is also a protection lacquer for the polished surfaces.
- Acid-free filling avoids spots while decementing the lenses.
- Quick and clean working
- When the cementing temperature as well as the pressure is constant, cementing tolerances of +/-0.01 mm may be obtained.

Order No.	Description	Packing unit
92-014-681	Cementing foil	ca. 60 m/roll

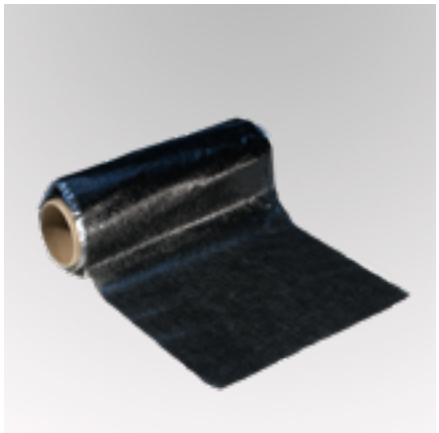

A special woven black material soaked in synthetic resin for cementing optical lenses and flat plano workpieces onto multiple blocks.

SPECIAL PLASTERS FOR PRISMS

Technical

- Color: white
- Linear expansion: < 0.02 %
- Resistance: 2 N/mm2 after 24 h
- Grit size: approx. 20 µm
- Quantities supplied: paper sack of 25 kg

Benefits

This plaster has an extremely low expansion rate.

Recommendations

- Add the special plaster to the water while stirring permanently.
- As soon as the powder has been fully soaked, stir briskly for 1-2 minutes and pour it as quickly as possible.
- To keep the expansion to a minimum, it is important that the total processing time is not longer than 6 minutes. After 16 min. the plaster is finally cured.
- It is vital to use clean tap water and clean mixing tools.
- To prevent a pre–hardening, please store the special plaster in a dry place.

A synthetic special plaster for blocking prisms in precision optics.

Order No.	Description	Packing unit
92-000-412	Special plasters for prisms	25 kg sack

VITRALIT® 6128 VT UV/THERMAL CURE ADHESIVE

Technical

- Radiation cure time: within seconds in UV-A range 320 nm-390 nm
- Thermal cure time: 40 minutes at 120° C
- Free of heavy metals, PFOS, and Phthalates

Solvent-free radiation curing adhesive.

Benefits

- Free of heavy metals, PFOS, and Phthalates
- Short curing times
- Good adhesion to a variety of substrates, inclusive glass, metals, and many thermoplastics
- Easy handling
- Easily compensates unevenness and bridges gaps

Recommendations

To obtain full cure at least one substrate must be transparent to the recommended wavelength. The curing speed will depend on the intensity of light, light source, the exposure time, and the light transmittance of the substrate. Increased mechanical properties are achieved after 12 hours.

Applications

Adhesive and substrate may not be cold and must be warmed up to room temperature prior to processing. After application, bonding of the parts should be done quickly.

Order No.	Description	Packing unit
92-000-428	Vitralit	100 gram bottle

UVN 2000 UV CURE ADHESIVE

Technical

Refractive index	1.56
Viscosity at 25°C	300 to 500 mPa.s
Density at 25°C	1.2 g/cm³
Elongation of failure	38%
Modulus (psi)	1.050 N/mm²
Tensile/shearing strength	20.7 N/mm²
Temperature resistance	80°C to + 90°C (constant)
	100°C to + 135°C (short-term)
Expiry time:	After several months (keep in refrigerator)

Application guidelines

- Before using UVN 2000 remove it from refrigerator (≤ +5°C) and let it warm to room temperature (≥ 18°C).
- For general applications an optimal UV radiation is in a wavelength range of 354 to 378 nm.
- Cure the lenses for 1 second in a distance from 20 cm with a 100 Watt quicksilver bulb. The lenses are now still re-adjustable, afterwards cure the lenses for another 5 minutes.
- After 3 weeks the UVN 2000 develops fully performance.

Recommendation

- Surfaces must be dry, clean and free from dust.
- The required quantity of adhesive should be dosed as exactly as possible. After fixing the bonded parts the edges may be cleaned with acetone.
- Apply UVN 2000 onto the center of the lens below. Place the upper lens on top and turn it while slightly pressing so that the adhesive will be evenly spread towards the edges and to remove possible bubbles.
- The pre-curing and final curing times depend on the thickness, size and UV transmission of the lenses.
- Lenses that have been bonded with UVN 2000 can be separated by placing them into cleaning agent Deconex OP-193 (at app. 80°C) and leaving them there for about 24 hours. After that, the parts can be separated with a razor blade and put into Deconex OP-193 again until the cement layer comes off.

Order No.	Description	Packing unit
92-014-681	UVN 2000 UV cure adhesive	28 g bottle

UVN 2000 is a solvent-free, crystal clear, single-component UV cure adhesive for bonding optical elements in precision optics. Meets MIL-A-3920C specification

CONTACT ADHESIVE PATTEX

Technical

- Color: beige
- Specific gravity: 0.89 kg/l
- Solvents: gasoline, acetone
- Vapour pressure: approx. 165 mbar
- Viscosity at 20°C: approx. 1800 mPas

Recommendations

The surface must be clean and free from oil, dust and other residue. Use acetone or any other solvent for cleaning. If necessary, smooth the tools with loose abrasive to reach a rougher surface.
Apply the adhesive evenly to both surfaces. The glue has to be dry (finger should not stick to the surface any more) before pressing the two surfaces together. The Processing temperature should be between 15°C and 20°C. Adhesion force depends on the height of pressure not on the durance of pressing. For pressing we recommend adequate pressing tools.

A polychloroprene-based special adhesive for applying polishing discs and polishing foils onto tools in ophthalmic and precision optics.

Order No.	Description	Packing unit
92-000-433	Contact adhesive Pattex	tube, 125 ml
92-000-434	Contact adhesive Pattex	tin can, 650 ml

TWO-COMPONENT ADHESIVE TECHNICOLL

Recommendations

The surfaces have to be dry, clean and free from dust and oil. A perfect adhesion will be achieved after smoothing the tools with a loose abrasive such as silicone carbide SCDL 320 or LS 30. A thin adhesive film should be applied preferably on both surfaces to be put together (optimum = 0.1 mm joint = about 100g/m2). Press slightly. Mixing ratio for Technicoll 8266 = 1:1 (volumetric). Once the red color has changed to cream, the mixture is ready for use.
It is recommended to have the adhesive harden in an oven.
Curing times:
Technicoll 8266/8277 A + B
50°C reduced to approx. 4 h
75°C reduced to approx. 2 h
100°C reduced to approx. 1 h
125°C reduced to approx. 30 min
150°C reduced to approx. 15 min

A special adhesive based on epoxy resins for fixing diamond pellets to lapping tools in ophthalmic and in precision optics.

Order No.	Description	Packing unit
92-000-436	Technicoll 8266/8267 A+B	130 g

PROTECTIVE LACQUERS

Benefits
Protects even delicate prisms & lenses after polishing from steaming up.

Recommendation

- To reach the required spray viscosity special thinner should be added. Do not use other thinners because of possible side effects.
- We recommend applying a good coat of protective lacquers to the optical surface with a brush or spray gun. Do not use a rubber foam roll (bubble effect).

Protective lacquer:	Recommended thinner	Cleaning suggestion
IL 400	universal thinner	ethanol

Order No.	Description	Packing unit
92-000-642	IL 400 black	5 l
92-004-578	Universal thinner	30 kg

Both acetone and ethanol can be obtained at your local chemicals shop.

For protecting prisms and lenses during subsequent processing after polishing.

SURFACE SAVER TAPE SUPERSTICK

Benefits
- Very easy application on polished surfaces or surfaces to be protected
- Polished surfaces will be protected against contamination and damages when stored for a longer period of time
- Suitable for provisional and regular cementing
- Can be easily removed by hand without leaving residues

Order No.	Description	Dimensions
92-000-457	Superstick	35 m x 10 cm
92-010-303	Auto Tape	35 m x 10 cm

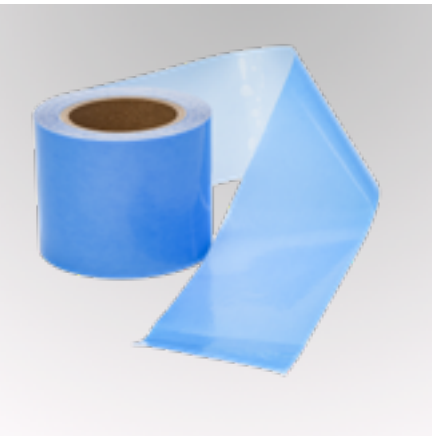

A polychloroprene-based special adhesive for applying polishing discs and polishing foils onto tools in ophthalmic and precision optics.

PROTECTION TISSUE PAPER

Order No.	Dimensions	Weight	Packing unit
92-000-654	50cmx75cm	21g/m²	1.500 pcs.

Ultra-thin and smooth tissue paper for wrapping, cushioning, or use as an interlayer. The tissue paper is chlorine-free and acid-free.

CENTERING TAPE

Technical
- Form: transparent plastic tape
- Dimensions: 100 m x 100 mm reel

Benefits
- Excellently adapts to lens surfaces while ensuring high compression strength and non-slip
- The tape is not subject to any restrictions concerning shelf life.

Recommendations
- Tailor the tape to the desired dimension and place between lens and clamping chucks.
- The Satisloh Centering Tape can be used with oil as well as with coolant additives.

Order No.	Description	Packing unit
92-004-888	Centering Tape	100 m x 100 mm

Transparent plastic tape protects lenses from fingerprints and scratches when centering.

DECONEX

Technical

The deconex range offers specialized alkaline cleaning agents designed for ultrasonic and immersion cleaning of optical components, lenses, precision instruments, and delicate materials. Each formulation is tailored to meet specific requirements in terms of material compatibility, cleaning power, and process conditions.

Benefits

- Excellent wetting and emulsifying properties for effective removal of polishing compounds, resins, and contaminants.
- Cleaning time is significantly reduced with increased temperature (approx. halved per +10 °C)

Recommendations

- Ultrasonic cleaning is strongly recommended for optimal results
- Storage: Frost-sensitive; store tightly closed in a dry place at +5 °C to +25 °C

Deconex OP 197 is a liquid, highly alkaline cleaning concentrate for removing color markings, protective film, cement and protective lacquer residues. It is primarily used in the first ultrasonic cleaning stage.

Order No.	Product	Description	PH value	Application area	Unit
92-008-111	Deconex OP 121	Stronger formulation for robust cleaning of glass and metal surfaces; excellent for removing polishing residues	~11.7	Pre-inspection, removal of organic residues (fingerprints, dust)	14 kg
92-008-112					35 kg
92-008-117	Deconex OP 148	Optimized for quartz and synthetic materials; superior wetting for complex geometries.	~12.5	Polishing compound removal, protective films, mold cleaning for precision optics	12 kg
92-008-118					240 kg
92-008-121	Deconex OP 164	Similar to OP 163 but with enhanced corrosion protection for delicate metal alloys.	~7.8	Neutral, phosphate-free, fine cleaning with sequestration before coating	10 kg
92-000-724	Deconex OP 165	For the use in soaking bath, ultrasonic cleaning systems and special brush and spindle cleaning machines.	7 – 8	For stubborn deposits, suitable as a cleaner for pre-cleaning systems, also for manual pre-cleaning.	10 kg
92-000-725					25 kg
92-000-729	Deconex OP 190	Universal high-performance cleaner; combines strong emulsifying action with broad material compatibility for mixed loads.	7.5–7.8	Removal of waxes and resins before inspection	10 kg
92-003-432					25 kg
92-003-431					220 kg
92-006-716	Deconex OP 193	Neutral NMP-free special cleaner for precision optical components – suitable for dipping baths and ultrasonic equipment.	~7	Removing colour markings from plastic and mineral glass, remove protective film residues and protective lacquers.	10 kg
92-006-717					220 kg
92-010-735* 92-010-662 92-006-649	Deconex OP 196	Alkalinity composition, reduces the surface tension remarkably «prior to inspection» cleaning.	13,6	Removal of protective lacquers, putties, resins and pitches, dissolves stubborn protective lacquers as well as specific color markings.	10 kg* 25 kg 210 kg
92-000-731	Deconex OP 197	Excellent wetting capability and a high removal capacity for organic dyes and inorganic color pigments, as well as for protective lacquers.	12	Highly alkaline liquid cleaning concentrate, removal of colour markings, protective film residues and protective lacquers from plastic and mineral glass.	25 kg
92-000-732					220 kg

*US only

AREOMETER/MEASURING CYLINDER

Benefits

The life time of the polishing slurries can be increased by frequent checking and recovering of density.

Recommendations

Fill 250 ml of the homogenized polishing slurry into the measuring cylinder at a temperature of 20°C.
In order to homogenise the suspension, shake the cylinder for about 1 min. After that, the areometer is immersed into the liquid without touching the cylinder sides.
After a period of 3.5 minutes the display of the areometer is checked on the top level of the liquid. Find the same value in the vertical axis on the chart and draw a horizontal line to the curve. Vertically below the point of intersection the concentration rate can be found on the concentration axis.

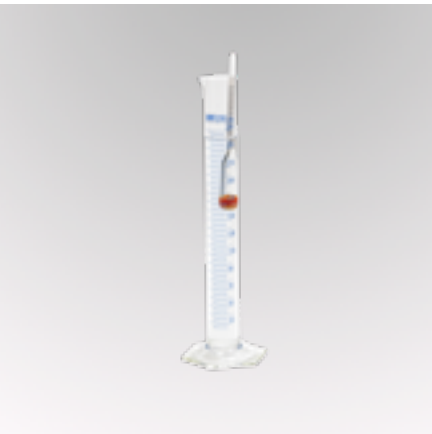

Measuring spindle with matching measuring cylinder (250 ml) to ascertain the concentration of polishing slurries.

Type of polish	Recommended concentration values	Field of application
SuperCerox 1663	60-80 g/l	serial production ophthalmic
SuperCerox 1663	60-70 g/l	RX-production ophthalmic
SuperCerox 1663	70-90 g/l	precision optics

Order No.	Description
92-000-482	Areometer for mineral w/o measuring cylinder
92-000-484	Measuring cylinder for areometer mineral

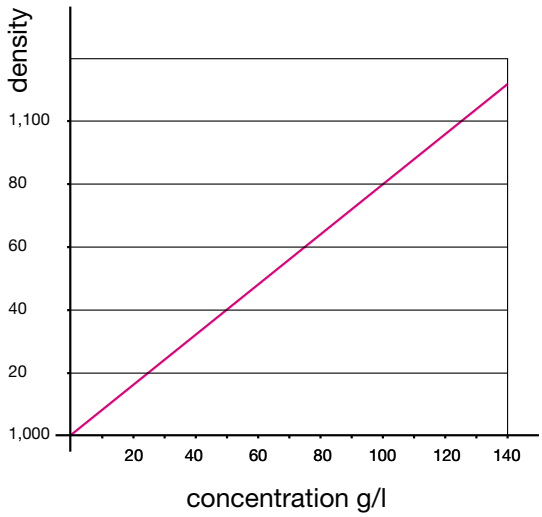

MANUAL REFRACTOMETER

Benefits
Quick establishing of the concentration of coolant suspensions..

Recommendations
Measuring cooling lubricants:
It is recommended to use the scale which is in the refractometer as a reading scale and to multiply- according to the kind of lubricant applied- the indicated value by a refractometer factor, usually contained in data sheets, or this factor may be established by the user as follows:

- Zero point has to be adjusted with the water which is used to prepare the mixings (tap water): By turning the adjusting screw the boundary line is exactly adjusted to „0“ at a temperature of 20°C.
- Prepare required lubricant concentration in water, shake well; e.g. mixture by 5%
- Measuring this mixture with the hand refractometer at the same temperature as when adjusting the zero point; this will result in reading value a. Establishing conversion factor: e.g. F = 5/a
- If any mixture by p-% is prepared, this will result in a refractometer factor to F = p/a
- The temperature correction once effected as described before causes that all further measurements are to be multiplied by this established factor in order to obtain the concentration of the cooling lubricant.

Applications

- Fold up lighting plate and put 2 or 3 drops on the horizontally held measuring surface
- Shut lighting plate: The measuring surface should be completely wetted by the sample liquid
- Adjust the instrument to a wide-range light source and look through the eyepiece. If necessary, adjust to scale by turning

Temperature Adjustment
The scales have been determined for a temperature of 20°C. The refractometer is temperature compensated for 10°C - 40°C.

Order No.	Description
92-000-480	Digital RefractometerDR 101-60
92-000-481	Handheld Refractometer0-16°Brix

A measuring instrument for checking the concentration of coolant suspensions in ophthalmic and precision optics. Besides an easy handling, this hand refractometer offers a clean measuring method with only small test quantities and no chemicals required.

FILTER CLOTH

Technical

- Weight: 20 g/m2
- Thickness: 0.09 mm
- Tensile strength dry: length 60 N; cross 8 N
- Tensile strength wet: length 20 N; cross 1.5 N
- Pore size dry: 157-235 µm
- Pore size wet: 115-170 µm
- Pore volume: 85%
- Dimensions: 150m x 35 cm

Benefits

Longer life of the coolant suspension..

Recommendations

Filter paper to be used on Satisloh coolant filter equipments.

Order No.	Packing Unit
92-000-738	Filtering paper 150 m

Other roll dimensions on request.

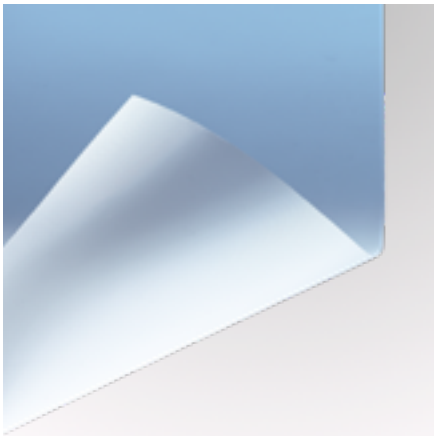

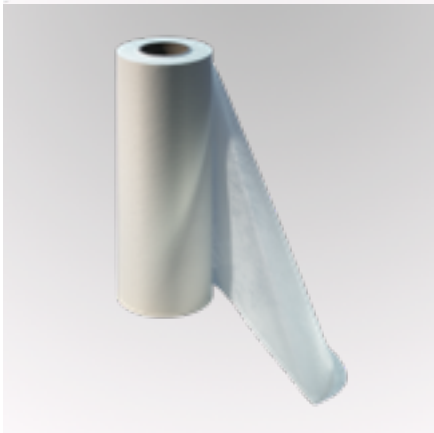

A micro filter paper for filtering glass particles in coolant suspensions.

DIAMOND SUSPENSION MAGNUM-TOP

Technical

- Monocrystalline diamond grit
- Narrow calibration, free from agglomerates, free from oil and solvents, odourless
- Water-based

Benefits

- Perfectly suitable for sprayguns to prevent nozzles and hoses from
- clogging
- Will not subside for months
- Does not clog

Recommendations

Diamond suspension (spray) should only be used before polishing. During polishing we recommend diamond lubricants. This improves your polishing results, because of the even abrasion effect of single diamond grain. Permanently adding diamond suspensions or-spray will impair the polishing results.

Order No.	Description		Packing unit
92-003-828	Magnum-Top	0,10 µm	1000 ml
92-003-830	Magnum-Top	0,25 µm	1000 ml
92-003-831	Magnum-Top	1 µm	1000 ml
92-003-832	Magnum-Top	3 µm	1000 ml

DIAMOND LUBRICANT YELLOW-S

Technical

- Suitable for pitch polishing
- Water based

Suitable for aqueous diamond suspensions.

Order No.	Description	Packing unit
92-003-952	Diamond lubricant Yellow-S	10 l

All listed products are available from stock.

DIAMOND SUSPENSION MAGNUM-TOP-DUO

Technical

- Containing closely calibrated, blocky, monocrystalline diamonds in low-viscous suspension
- Low surface tension and thus very good wetting properties
- A combination of the two well-known components
- Diamond suspension Magnum-Top and Diamond lubricant yellow

Benefits

- The combination of both components offers:
- Easier handling
- Higher stock removal
- Better surface quality

Order No.	Description		Packing unit
92-009-996	Magnum-Top-Duo	0.10 µm	2500 ml
92-006-553	Magnum-Top-Duo	0.25 µm	2500 ml
92-007-791	Magnum-Top-Duo	1 µm	2500 ml
92-008-158	Magnum-Top-Duo	3 µm	2500 ml
92-008-159	Magnum-Top-Duo	6 µm	2500 ml
92-008-160	Magnum-Top-Duo	9 µm	2500 ml

DIAMOND SUSPENSION POLY-TOP

Order No.	Description		Packing unit
92-003-833	Poly-Top	0.10 µm	1l
92-003-834	Poly-Top	0.25 µm	1l
92-003-835	Poly-Top	1 µm	1l
92-006-423	Poly-Top	3 µm	1l
92-006-721	Poly-Top	6 µm	1l
92-009-355	Poly-Top	15 µm	1l

POLISHING CLOTHS SWING-PLUS, QUICK-STEP, MAMBO

Technical

- **Swing-Plus:**
  Color: grey-black
  Flocked universal polishing cloth with very low flocking, self-adhesive flocked on a solid support suitable for ¼, 1, 3 and 6 µm diamond polish and for O.P.S. and alumina.
  Hardness**, Stock removal***, Marginal sharpness***, Life time***
- **Quick-Step:**
  Color: white
  Solid artificial fibre cloth for 6, 9, 15 and 30 µm diamond polish self-adhesive also suitable for 3 µm in case of ceramics.
  Hardness***, Stock removal***+, Marginal sharpness***+, Life time***+
- **Mambo:**
  Color: black
  Chemically resistant, spongy oxide polishing cloth, suitable for polishing with oxide polishing suspension (O.P.S.). Ensuring a very good marginal sharpness and non-deforming surfaces.
  Hardness**, Stock removal**, Marginal sharpness***+, Life time***

  *= satisfactory, **= good, ***= good to very good, ***+= very good

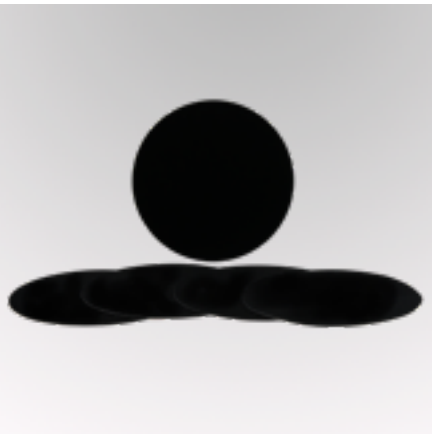

All polishing cloths can be used for alcoholic and watery polishing suspensions and lubricants.
The cloths are available in diameters 200 mm, 250 mm and 300 mm. All other dimensions: customized

Order No.	Description		Packing unit
92-000-233	Swing-Policorw. PSA	250mm Ø	VE=5
92-000-235	Swing-Policorw. PSA	400mm Ø	VE=5

EVAPORANTS FOR AR COATING

Technical

- High purity and consistency

Benefits

- Guaranteed consistent high quality and high performance for AR coating processes
- High quality materials
- Approved quality

Recommendations

- Store in a dry place
- Keep containers closed

Applications

- All types of optical coatings
- Can be used in all types of coaters that work with thermal or EB evaporation sources

High quality, high performance evaporation materials.

OXIDES

Order No.	Product	Product	Form	Specification	Unit
92-007-269	aluminium oxide	Al_2O_3	granules	1-3 mm	250 g
92-005-994	silicon dioxide	SiO_2	granules	1-4 mm	500 g
92-005-993	silicon dioxide	SiO_2	granules	2,5-4 mm	500 g
92-005-897	silicon dioxide	SiO_2	granules	1-3 mm	5000 g
92-005-986	silicon monoxide	SiO	granules	2-4 mm	250 g
92-007-274	adhesion material	SiO/Cr	granules	1-3 mm	250 g
92-005-265	tantalum pentoxide	Ta_2O_5	granules	1-4 mm	250 g
92-005-997	titanium (II) oxide	TiO	pills	1 g	250 g
92-005-331	titanium oxide S	TiO 1.7	granules	1-4 mm	250 g
92-007-265	zirconium dioxide grey	ZrO_2	pills	13.5 x 9.5 mm	250 g
92-007-267	zirconium dioxide grey	ZrO_2	pills	17.5 x 6 mm	250 g
92-007-258	zirconium dioxide white	ZrO_2	pills	21 x 6 mm	250 g
92-007-260	zirconium dioxide white	ZrO_2	pills	21 x 8 mm	250 g
92-007-261	zirconium dioxide white	ZrO_2	pills	21 x 8 mm	5000 g
92-005-895	zirconium monoxide	ZrO	granules	0.5- 4 mm	250 g

FLUORIDES

92-005-914	magnesium fluoride	MgF_2	granules	1-2.5 mm	500 g
92-005-912	magnesium fluoride	MgF_2	granules	2.5-4 mm	500 g

METALS

92-005-984	chromium	Cr	granules	1-4 mm	250 g
92-005-983	chromium	Cr	discs	20 x 5 mm	2 pcs.

others on request, for example:
Oxides, Fluorides, Nitrides, Telluride, Borides, Carbides, etc

SPUTTERING MATERIALS

Benefits
- Optimized for Satisloh coating processes and machines
- Assure high proven quality and high performance for Satisloh
- Sputtering processes
- High performance materials and design
- High purity and consistency
- Process guarantee with Satisloh sputtering processes
- Lowest pre-sputtering times
- Designed for extremely high current density

Recommendations
- Store in a dry place
- Always replace a target together with seals and contact foil
- Higher stock removal
- Better surface quality

Applications
- Satisloh process families for sputter coaters
- EASY- COAT process family
- EASY-COAT MIRROR process family
- Customized coatings

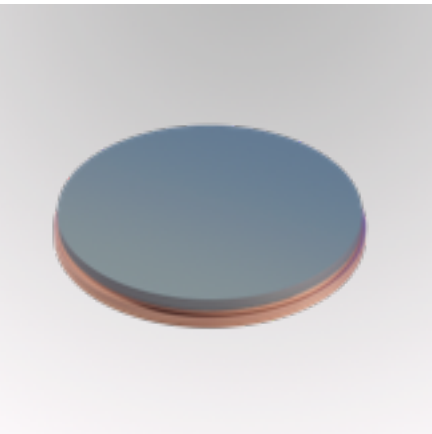

Ensure optimum performance for Satisloh sputtering processes.

Order No.	Product	Unit
92-009-192	SL Target (high purity)	1 pc.

Other materials on request!

TEST GLASSES

Recommendations

- Store in a dry place

Applications

- For all coating processes

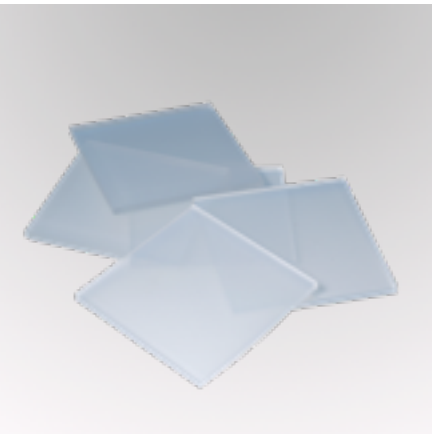

Satisloh test glasses monitor the quality of coatings.

Order No.	Product Shape	Dimensions	Material	Surface	Unit
92-006-161	round	40 mm	Floatglas	clear	100 pcs.
92-005-197	round	24.6 mm	Floatglas	frosted	100 pcs.
92-005-877	rectangular	40 x 44.5 mm	B270 i Ultra White Glass	clear	100 pcs.
92-005-882	square	45 x 45 mm	B270 i Ultra White Glass	frosted	100 pcs.
92-006-279	Square	45x45mm	B270 i Ultra White Glass	Frosted	100 pcs.

MONITOR CRYSTALS

Technical

- Industry standard monitor crystals
- Available with gold, silver and alloy coating
- Usable in most available coating systems

Benefits

- Proven quality
- High thickness measurement accuracy for highest process stability

Recommendations

- Store in a dry place

Applications

- All box coaters
- All Satisloh AR processes

Used for high precision coating thickness control in hot and cold processes.

Order No.	Product	Nominal Frequency	Diameter	Unit
92-005-219	Gold, double anchor	5.98 MHz	13.9 mm	10 pcs.
92-006-283	Gold, double anchor	6 MHz	13.9 mm	10 pcs.
92-010-531	Gold, double anchor	5.98 MHz	13.9 mm	10 pcs.
92-010-532	Alloy, double anchor	5.98 MHz	13.9 mm	10 pcs.

CRUCIBLE LINERS FOR ELECTRON BEAM EVAPORATION

Technical

- Liners made of special material to avoid chemical interaction with the contents
- Specifically designed liners available for granulates or materials in pill form

Benefits

- Optimum results when utilizing Satisloh coating processes, machines and materials
- Proven quality
- Process guarantee with Satisloh processes
- Long lifetime

Recommendations

- Store in a dry place

Applications

- Applicable in most of the commercial electron beam evaporation systems

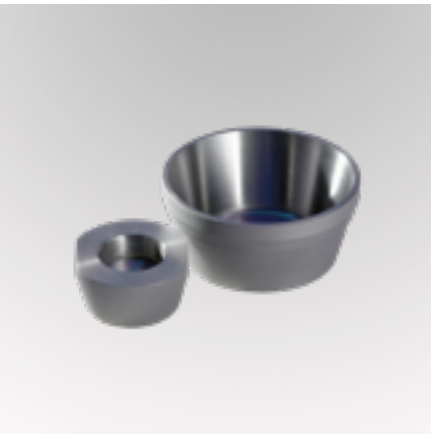

Provide optimum coating results for all electron beam guns used in coating systems.

Others available on request.

Order No.	Use with	Bottom Ø/mm	Top Ø/mm	Height/mm	Angle/°	~ Volume/cm³
92-005-136	Pills	22	30	15	30	1.5
92-005-139	Granules	14	22.6	16	30	4
92-005-143	Granules, SA1G, S15G	15.7	23	17.5	30	2.7
92-005-144	Pills	22	30	15	30	1.2
92-005-148	Granules, S3F	29.5	38	18,5	30	9.9
92-005-149	Granules, SA1G, SC1G	23.4	30	15	30	4.7
92-005-150	Pills, S22P	22	30	15	30	2.7
92-005-151	Granules, S3F	27.1	39	27.9	30	19.8
92-005-152	Granules	27.1	39	27.9	30	2.5
92-006-666	Granules, S15G	29.5	39.4	18.5	30	8.5
92-009-968	Granules, S15G	17.1	23	15	30	2.1
92-009-993	Granules, S3F	24	31	15.6	30	6.8
92-009-994	Granules, S3F, SA1G, SC1G	24	31	15.6	30	2.5
92-009-999	Pills, S11P	15.4	22.4	15.6	30	1.3
92-010-230	Granules, SA1G, SC1G	14.4	22.8	16.6	30	1.6
92-010-231	Pills, S11P	14.4	22.8	16.6	30	1.3
92-011-311	Granules, SA1G / SC1G	28.2	38	20	30	3.7
92-011-487	Pills, S22P	28.2	38	20	30	2.6
92-012-658	Granules	28.2	38	20	30	9.9
92-014-787	Pills, S23P	31.1	38	15,5	30	3.3

EVAPORATION BOATS FOR THERMAL SOURCES

Boats are designed not to react with their content and conduct current optimally.

Benefits

- Optimized for Satisloh and other coating processes, machines and materials
- Proven quality
- Process guarantee with Satisloh processes
- Long lifetime

Applications

- For Satisloh coating processes with thermal evaporation
- Applicable in most of the commercial thermal sources

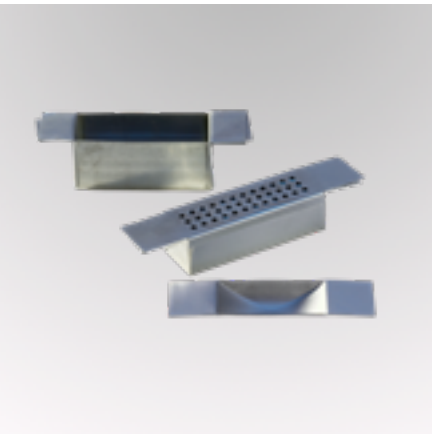

High quality evaporation boats used for all thermal sources in Satisloh coaters and most other coaters.

Order No.	Product	A	B	Vol.	Type	Machine Type	Material	Unit
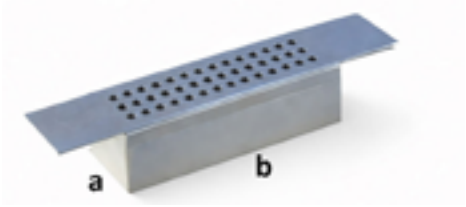								
92-006-298	Boat no. 7	12 mm	65 mm	6,0 cm³	lid	Box coaters, 900, 1200 series	Color sub-stances	10 pcs.
92-006-295	Boat CV	12 mm	44 mm	3,0 cm³	lid	Box coaters, 900, 1200 series	Color sub-stances	10 pcs.
92-007-628	Boat top coat	12 mm	44 mm	2,2 cm³	lid	Box coaters	Top coats	10 pcs.
92-006-147	Boat	25 mm	63 mm	flat	open top	Box coaters		20 pcs.
92-008-590	Boat top coat	12 mm	44 mm	3 cm³	open top	Box coaters	Top coats	10 pcs.

FILAMENTS FOR ELECTRON BEAM AND ION SOURCES

Benefits

- Proven quality
- Process guarantee for Satisloh processes

Recommendations

- Store in a dry place

Applications

- Mark I, I+, II, II+ ion guns and thermal electron beam gun

High quality filaments for electron beam guns and ion guns for Satisloh coaters and most other coaters.

Order No.	Product	Specification	System	Unit
92-006-293	Filament	Mark II	Ion gun Mark II	10 pcs.
92-007-277	Filament	Mark II+	Ion gun Mark II+	10 pcs.
92-006-294	Filament	Mark I	Ion gun Mark I	10 pcs.
92-007-547	Filament	Mark I+	Ion gun Mark I+	10 pcs.
92-005-229	Filament + gauge	Standard emitter	Temescal E.B.-Gun	5 pcs.
92-005-235	Filament TL	Standard emitter	Temescal E.B.-Gun	1 pc.
92-016-646	Filament	Mark II	Ion gun Mark II	10 pcs.
92016-650	Filament	Mark II+	Ion gun Mark II+	10 pcs.

CONSUMABLES FOR ION GUNS

Benefits

- Proven quality
- Process guarantee for Satisloh processes

Recommendations

- Store in a dry place

Applications

- For all processes using ion gun treatment

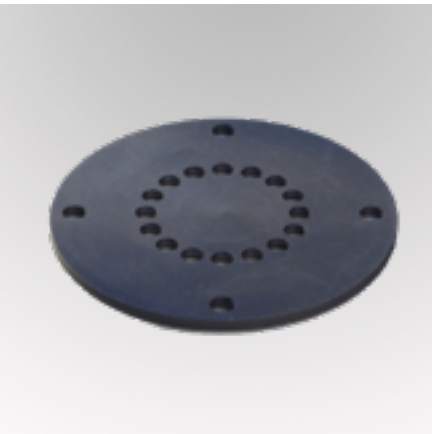

A large variety of high quality standard and customized consumables for ion guns.

Order No.	Product	Material	System	Unit
92-005-222	Anode	Graphite	Ion gun Mark I	1 pc.
92-005-387	Anode	Inox (stainless)	Ion gun Mark I	1 pc.
92-006-019	Gas distributor	Graphite	Ion gun Mark I	1 pc.
92-006-018	Insulator	Sapphire ball	Ion gun Mark I	1 pc.
92-005-224	Gas distributor, special	Graphite	Ion gun Mark I	1 pc.
92-005-228	Gas distributor, special	Inox (stainless)	Ion gun Mark I	1 pc.
92-006-015	Insulator	Ceramic	Ion gun Mark I, Mark II	1 pc.
92-006-017	Gas distributor	Stainless steel	Ion gun Mark II	1 pc.
92-006-016	Anode	Inox (stainless)	Ion gun Mark II	1 pc.
92-005-227	Gas distributor	Graphite	Ion gun Mark II	1 pc.
92-006-014	Anode	Graphite	Ion gun Mark II	1 pc.
92-006-013	Gas distributor	Titanium	Ion gun Mark II	1 pc.
92-007-278	Anode	Stainless steel	Ion gun Mark II+	1 pc.
92-007-292	Gas distributor	Graphite	Ion gun Mark II+	1 pc.
92-009-074	Gas distributor	Graphite	Ion gun Mark I+	1 pc.

OIL AND GREASE

Applications

Ensure performance of your coating system with regularly scheduled change-out of oils and greases.

Order No.	Product	Specification	System	Unit
92-005-165	Oil	Grade 20	Roots pumps	5 kg.
92-006-116	Oil	P3	Rotary/Roots pumps	5 kg
92-007-965	Oil	LVO 100	Roots pumps	5 l
92-007-966	Oil	LVO 130 SV300/300B	Rotary pumps	5 l
92-009-793	Oil	LVO210 (SV300B-GS555/ WH700)	Roots pumps	1 l
92-015-733	Oil	Ultragrade 70	Rotary pumps	1 kg
92-016-146	Oil	–	Diffusion pumps	5 kg
92-010-117	Oil	SL 704	Diffusion pumps	1 gal

Satisloh oil and grease are the optimal choice to maintain the reliability of Satisloh equipment.

Order No.	Material	Specification	Use	Unit
92-005-161	High vacuum grease	Silicon Oil based	Reduces wear in contact between plastic and metal and rubber and metal Low volatility Excellent resistance to water, chemicals, and high and low temperatures Does not contain any deliberately added perfluorinated and polyfluorinated alkyl compounds (PFAS)	50 g tube
92-012-807	Klüberalfa GR Y VAC 3	PTFE based	Reduces wear in contact between plastic and metal and rubber and metal Low evaporation loss, even under ultra-high vacuum conditions High thermal stability Good resistance to aggressive media	100 g tube

VACUUM CHUCKS WITH SEAL LIP

Vacuum receptions consist of a base (stainless steel), a sealing lip (elastic rubber) and a support ring (plastic or brass). Satisloh provides both the complete receptions and each component separately. The production of lens-specific receptions is also available on request. On the following pages you will find an overview of our range of receptions

VACUUM CHUCKS WITH SEAL LIP

Vacuum chucks with seal lip DIN 58739-1 (25 x 15)

For machines: SPM-50, 55, 60, 120, 125, 140, 150, 200, SII, GI, GII

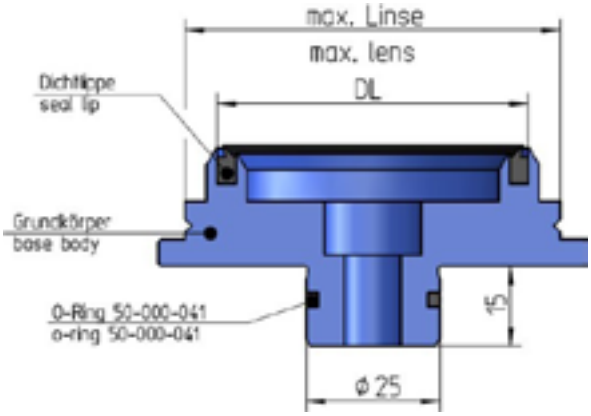

Lens dia. range	Synline number	Vacuum chuck complete	Base body	Seal lip	DL.
10-12	953.134.001-2	02-004-295	05-013-938	05-006-039	10
13-15	-	02-004-296	05-012-648	05-005-495	13
15-17	-	02-004-293	05-013-939	05-005-496	15
17-19	-	02-004-297	05-012-649	05-005-498	17
19-21	-	02-004-294	05-013-940	05-005-499	19
22-24	953.104.800-2	02-004-298	05-012-650	05-005-502	22
17-24	953.104.801-2	02-004-299	05-009-175	05-005-498	17
19-28	953.104.802-2	02-004-300	05-009-184	05-005-499	19
22-30	953.104.803-2	02-004-301	05-009-185	05-005-502	22
24-32	953.104.804-2	02-004-302	05-009-186	05-005-516	24
26-32	953.104.805-2	02-004-303	05-009-187	05-003-153	26
28-36	953.104.806-2	02-004-304	05-009-188	05-003-491	28
30-42	953.104.807-2	02-004-305	05-009-189	05-005-553	30
35-46	953.104.808-2	02-004-306	05-009-190	05-005-001	35
39-46	953.104.809-2	02-004-307	05-009-191	05-003-152	39
43-50	953.104.810-2	02-004-308	05-009-192	05-005-052	43
48-62	953.104.811-2	02-004-309	05-009-193	05-001-838	48
53-62	953.104.812-2	02-004-310	05-009-194	05-003-309	53
58-70	953.104.813-2	02-004-311	05-009-195	05-003-206	58
63-76	953.104.814-2	02-004-312	05-009-215	05-000-077	63
66-76	953.104.815-2	02-004-313	05-009-216	05-003-308	66
82-90	953.104.816-2	02-004-314	05-009-217	05-003-205	72
90-110	953.104.817-2	02-004-315	05-009-218	05-003-204	85
110-125	953.104.818-2	02-004-316	05-009-219	05-003-203	100
125-150	953.104.819-2	02-004-317	05-009-220	05-003-202	116
150-170	953.104.820-2	02-004-318	05-009-221	05-003-201	140
170-190	953.104.821-2	02-050-820	05-017-402	05-003-200	160
190-210	953.104.822-2	02-050-821	05-051-487	05-006-932	180
210-240	953.104.823-2	02-052-000	05-054-614	05-009-782	200
234-260	953.104.824-2	02-052-001	05-052-886	05-017-001	230
260-278	953.104.826-2	02-052-002	05-052-887	05-017-002	260

VACUUM CHUCKS WITH SEAL LIP

Vacuum chucks with seal lip DIN 58739-1 (12 x 20)
For machines: SPM-10/25/30/50

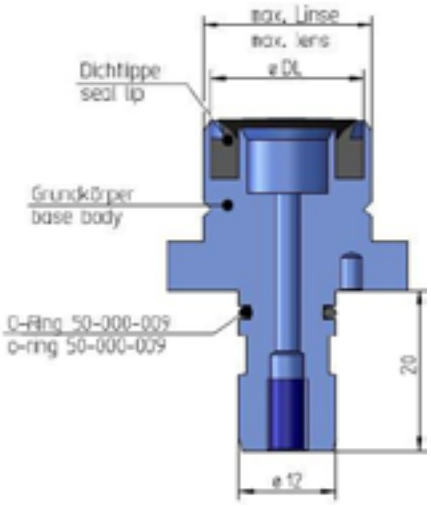

Lens dia. range	Synline number	Vacuum chuck complete	Base body	Seal lip	DL.
10-14	954.134.001-1	02-005-030	05-013-868	05-006-039	10
14-16	954.134.002-1	02-005-031	05-013-869	05-005-495	13
15-17	954.134.006-1	02-050-172	05-013-871	05-005-496	15
17-19	954.134.003-1	02-050-170	05-013-872	05-005-498	17
19-21	954.134.005-1	02-006-552	05-013-873	05-005-499	19
22-24	954.134.004-1	02-050-171	05-013-874	05-005-502	22
24-26	954.134.011-1	02-054-955	05-056-726	05-005-516	24
26-28	954.134.007-1	02-050-950	05-054-613	05-003-153	26
28-30	954.134.012-1	02-054-958	05-056-727	05-003-491	28
30-32	954.134.013-1	02-054-959	05-056-728	05-005-553	30
35-37	954.134.014-1	02-054-960	05-056-729	05-005-001	35
39-46	954.134.197-1	02-073-645	05-080-560	05-003-152	39
43-50	954.134.198-1	02-073-657	05-080-566	05-005-052	43
44-62	954.134.199-1	02-073-658	05-080-580	05-001-838	48

COLLET CHUCKS

Collet chucks DIN 58739-3 / Pull-type collets
Collet chucks hold spherical lens blanks during processing. Satisloh offers both customer-specific collet chucks as well as semi-finished products for in-plant production. Pull-type collets with or without block for rod lenses or cementing receptions are available on request.

COLLET CHUCKS

Collet chucks DIN 58739-3

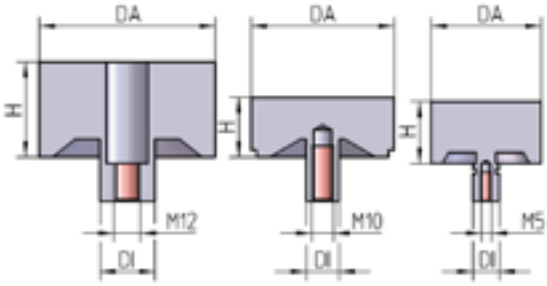

Semi-finished parts
Machines: SPM-10, 25, 30, 50

Order No.	DA	DI	H	M
05-013-527	30	12	40	M5
05-013-528	50	12	45	M5

Machines: SPM-50 (before 2019), 55, 60, 120 ,140,125, SII, GI, GII

05-007-429	60	15	47	M10
05-017-110	60	15	55	M10
05-007-430	65	15	47	M10
05-007-434	80	25	47	M10
05-007-433	85	25	49	M10
05-007-439	100	25	47	M10
05-011-169	120	25	52	M10
05-011-170	140	25	58	M10
05-016-492	80	25	63	M12

Pull-type collets are only available on request

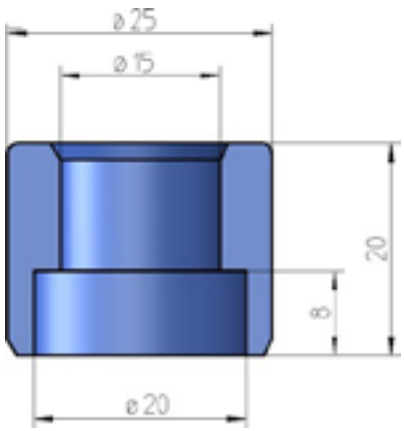

Collet chuck bushing 05-002-923

POLISHING CHUCKS WITH SEAL LIP

Polishing chuck receptions consist of a membrane body (stainless steel), a seal lip (elastic rubber) and a support ring (plastic or brass). Satisloh provides both the complete reception and each component separately. The production of lens-specific receptions is also available on request. In the following you can find an overview of our range of receptions.

POLISHING CHUCKS WITH SEAL LIP

Polishing chucks with seal lip (12 x 20)

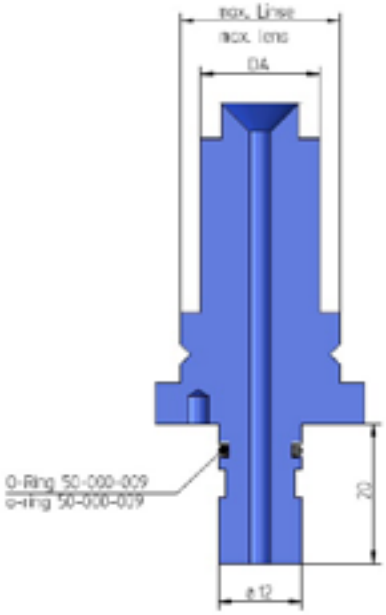

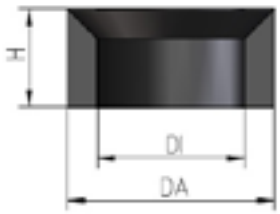

Form A

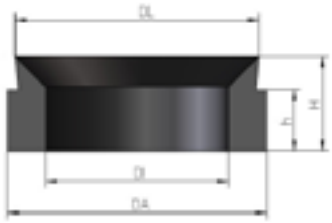

Form B

Maschinen / Machines: SPS-10, SPS-25, SPS-30, SPS-50

Lens dia. range	Form	Synline number	Base body	Seal lip	DA	DL.
3-11	B	953.111.701-3	05-082-260	05-012-871	3	2.5
	A			05-012-872	3	3
5-11	B	953.111.702-3	05-013-323	05-012-873	5	4
	A			05-012-874	5	5
7-13	B	953.111.703-3	05-013-324	05-012-875	7	6
	A			05-012-876	7	7
9-15	B	953.111.704-3	05-013-325	05-012-877	9	8
	A			05-012-878	9	9
11-17	B	953.111.705-3	05-013-326	05-012-879	11	10
	A			05-012-880	11	11
13-19	B	953.111.706-3	05-013-327	05-012-881	13	12
	A			05-012-882	13	13
15-21	B	953.111.707-3	05-013-329	05-012-883	15	14
	A			05-012-884	15	15
17-23	B	953.111.708-3	05-013-330	05-012-885	17	16
	A			05-012-886	17	17
19-25	B	953.111.709-3	05-013-331	05-012-887	19	18
	A			05-012-888	19	19
21-27	B	953.111.710-3	05-013-332	05-012-889	21	20
	A			05-012-890	21	21
23-30	B	953.111.711-3	05-013-333	05-012-891	23	22
	A			05-012-892	23	23
25-31	B	953.111.712-3	05-013-334	05-012-893	25	24
	A			05-012-894	25	25
27-33	B	953.111.713-3	05-013-335	05-012-895	27	26
	A			05-012-896	27	27
29-35	B	953.111.714-3	05-013-336	05-012-897	29	28
				05-012-898	29	29

POLISHING CHUCKS WITH SEAL LIP

Polishing chucks with seal lip (25 x 42)

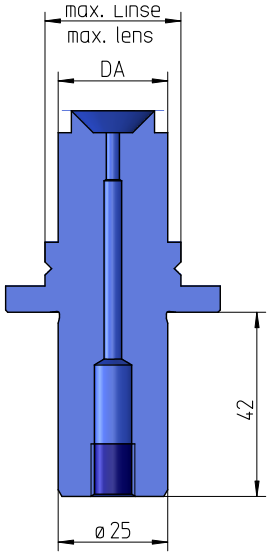

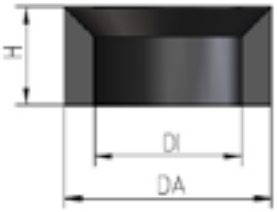

Form A

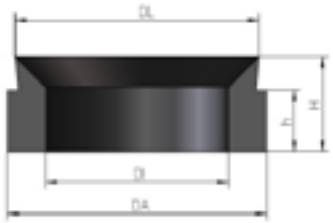

Form B

Lens dia. range	Form	Synline number	Base body Drawing No.	Base body	Seal lip	Seal Lip Drawing No.	DA	DL.
5-11	B	953.111.702-4	953.211.702	05-066-454	05-012-873	951.140.041	5	4
	A				05-012-874	951.140.051	5	5
7-13	B	953.111.703-4	953.211.703	05-066-455	05-012-875	951.140.061	7	6
	A				05-012-876	951.140.071	7	7
9-15	B	953.111.704-4	953.211.704	05-066-465	05-012-877	951.140.081	9	8
	A				05-012-878	951.140.091	9	9
11-17	B	953.111.705-4	953.211.705	05-066-466	05-012-879	951.140.101	11	10
	A				05-012-880	951.140.111	11	11
13-19	B	953.111.706-4	953.211.706	05-066-468	05-012-881	951.140.121	13	12
	A				05-012-882	951.140.131	13	13
15-21	B	953.111.707-4	953.211.707	05-066-469	05-012-883	951.140.141	15	14
	A				05-012-884	951.140.151	15	15
17-23	B	953.111.708-4	953.211.708	05-066-470	05-012-885	951.140.161	17	16
	A				05-012-886	951.140.171	17	17
19-25	B	953.111.709-4	953.211.709	05-066-471	05-012-887	951.140.181	19	18
	A				05-012-888	951.140.191	19	19
21-27	B	953.111.710-4	953.211.710	05-066-473	05-012-889	951.140.201	21	20
	A				05-012-890	951.140.211	21	21
23-30	B	953.111.711-4	953.211.711	05-066-474	05-012-891	951.140.221	23	22
	A				05-012-892	951.140.231	23	23
25-31	B	953.111.712-4	953.211.712	05-066-475	05-012-893	951.140.241	25	24
	A				05-012-894	951.140.251	25	25
27-33	B	953.111.713-4	953.211.713	05-013-355	05-012-895	951.140.261	27	26
	A				05-012-896	951.140.271	27	27
29-35	B	953.111.714-4	953.211.714	05-066-476	05-012-897	951.140.281	29	28
	A				05-012-898	951.140.291	29	29
31-34	B	953.111.715-4	953.211.715	05-066-479	05-013-205	951.140.302	31	30
	A				05-013-206	951.140.311	31	31
33-36	B	953.111.716-4	953.211.716	05-066-478	05-013-207	951.140.321	33	32
	A				05-013-208	951.140.331	33	33

POLISHING CHUCKS WITH SEAL LIP

Lens dia. range	Form	Synline number	Base body Drawing No.	Base body	Seal lip	Seal Lip Drawing No.	DA	DL.
35-39	B	953.111.717-4	953.211.717	05-066-480	05-013-209	951.140.341	35	34
	A				05-013-210	951.140.351	35	35
37-41	B	953.111.718-4	953.211.718	05-066-482	05-013-211	951.140.361	37	36
	A				05-013-212	951.140.371	37	37
39-44	B	953.111.719-4	953.211.719	05-066-481	05-013-213	951.140.381	39	38
	A				05-013-214	951.140.391	39	39
41-48	B	953.111.720-4	953.211.720	05-066-483	05-013-215	951.140.401	41	40
	A				05-013-216	951.140.411	41	41
43-48	B	953.111.721-4	953.211.721	05-066-484	05-013-217	951.140.421	43	42
	A				05-013-218	951.140.431	43	43
45-52	B	953.111.722-4	953.211.722	05-066-485	05-013-219	951.140.441	45	44
	A				05-013-220	951.140.451	45	45
47-52	B	953.111.723-4	953.211.723	05-066-486	05-013-221	951.140.461	47	46
	A				05-013-222	951.140.471	47	47
49-56	B	953.111.724-4	953.211.724	05-066-487	05-013-223	951.140.481	49	48
	A				05-013-224	951.140.491	49	49
51-56	B	953.111.725-4	953.211.725	05-066-488	05-013-225	951.140.501	51	50
	A				05-013-226	951.140.511	51	51
53-59	B	953.111.726-4	953.211.726	05-066-489	05-013-227	951.140.521	53	52
	A				05-013-228	951.140.531	53	53
55-62	B	953.111.727-4	953.211.727	05-066-490	05-013-229	951.140.541	55	54
	A				05-013-230	951.140.551	55	55
57-62	B	953.111.728-4	953.211.728	05-066-491	05-013-231	951.140.561	57	56
	A				05-013-232	951.140.571	57	57
59-64	B	953.111.729-4	953.211.729	05-066-492	05-013-233	951.140.581	59	58
	A				05-013-234	951.140.591	59	59
61-68	B	953.111.730-4	953.211.730	05-066-494	05-013-235	951.140.601	61	60
	A				05-013-236	951.140.611	61	61
64-72	B	953.111.731-4	953.211.731	05-066-503	05-013-237	951.140.621	64	62
	A				05-013-238	951.140.641	64	64
68-76	B	953.111.732-4	953.211.732	05-066-505	05-013-239	951.140.661	68	66
	A				05-013-240	951.140.681	68	68
72-80	B	953.111.733-4	953.211.733	05-066-506	05-013-241	951.140.701	72	70
	A				05-013-242	951.140.721	72	72
76-84	B	953.111.734-4	953.211.734	05-066-513	05-013-243	951.140.741	76	74
	A				05-013-244	951.140.761	76	76
80-88	B	953.111.735-4	953.211.735	05-066-514	05-013-245	951.140.781	80	78
	A				05-013-246	951.140.801	80	80
84-93	B	953.111.736-4	953.211.736	05-066-515	05-013-247	951.140.821	84	82
	A				05-013-248	951.140.841	84	84
88-98	B	953.111.737-4	953.211.737	05-066-516	05-013-249	951.140.861	88	86
	A				05-013-250	951.140.881	88	88
92-102	B	953.111.738-4	953.211.738	05-066-517	05-013-251	951.140.901	92	90
	A				05-013-252	951.140.921	92	92

POLISHING CHUCKS WITH MEMBRANE

Polishing chucks with membrane
DIN 58739-2 (25 x 42)

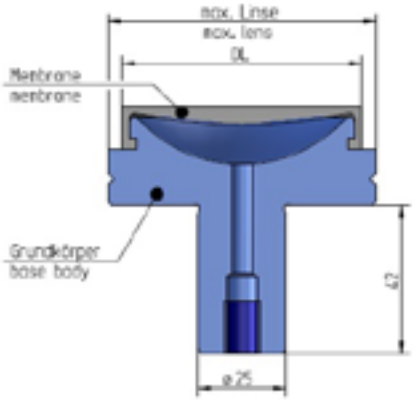

Machines: SPS-50 (vor 2019), 55, 60, 125, 140, 150, PII, SPM-200

Lens dia. range	Synline number	Base body	Membrane	DL.
10-13	953.211.027-4	05-053-090	05-007-917	10
12-16	953.211.028-4	05-053-089	05-007-918	12
15-20	953.211.000-4	05-050-271	05-007-919	15
17-26	953.211.001-4	05-050-326	05-007-920	17
19-28	953.211.002-4	05-050-327	05-007-711	19
22-30	953.211.003-4	05-050-328	05-007-403	22
24-32	953.211.004-4	05-050-329	05-008-071	24
27-36	953.211.005-4	05-050-330	05-008-072	27
31-39	953.211.006-4	05-050-331	05-008-073	31
33-39	953.211.026-4	05-050-332	05-014-818	33
36-44	953.211.007-4	05-050-333	05-008-074	36
40-48	953.211.008-4	05-050-334	05-008-075	40

Machines: SPS-50 (vor 2019), SPS-55, SPS-60, SPS-125, SPS-140, 150, PII, SPM-200

Lens dia. range	Synline number	Base body	Membrane	DL.
44-52	953.211.009-4	05-050-335	05-007-712	44
48-56	953.211.010-4	05-050-336	05-007-713	48
54-62	953.211.011-4	05-050-337	05-008-076	54
56-64	953.211.012-4	05-050-338	05-007-714	56

Machines: SPS-125, 140, 150, PII

Lens dia. range	Synline number	Base body	Membrane	DL.
60-68	953.211.013-4	05-050-339	05-007-715	60
64-72	953.211.014-4	05-050-340	05-008-077	64
68-76	953.211.015-4	05-050-341	05-008-078	68
72-80	953.211.016-4	05-050-342	05-008-079	72
76-84	953.211.017-4	05-050-272	05-008-080	76
80-88	953.211.018-4	05-050-275	05-008-081	80
85-93	953.211.019-4	05-050-273	05-007-706	85
92-98	953.211.020-4	05-050-276	05-007-922	92
100-108	953.211.021-4	05-050-277	05-007-966	100
114-120	953.211.022-4	05-050-274	05-007-707	114
120-128	953.211.023-4	05-050-278	05-007-716	120

Maschinen / Machines: PII

Lens dia. range	Synline number	Base body	Membrane	DL.
132-138	953.211.024-4	05-050-279	05-007-967	132
146-154	953.211.025-4	05-050-280	05-007-717	146

POLISHING CHUCKS WITH MEMBRANE

Polishing chucks with membrane
DIN 58739-2 (25 x 42) two parts

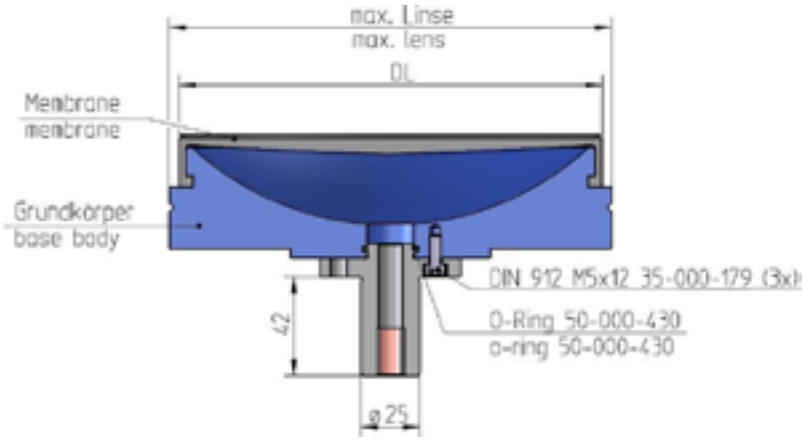

Machine: PII

Lens dia. range	Synline number	Base body Order No.	Membrane Order No.	DL.
157-165	953.311.026-4	02-054-859	05-011-042	157
168-176	953.311.027-4	02-054-861	05-079-490	168
180-188	953.311.028-4	02-054-864	05-011-046	180

POLISHING CHUCKS WITH MEMBRANE

Polishing chucks with membrane
DIN 58739-2 (12 x 20)

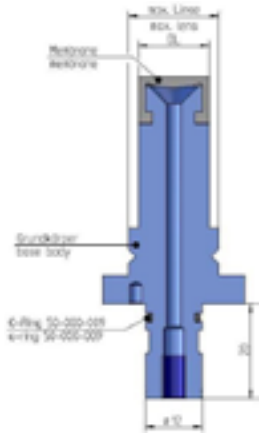

Maschinen / Machines: SPS-10, SPS-25, SPS-30, SPS-50

Lens dia. range	Synline number	Base body Order No.	Membrane Order No.	DL.
10-14	954.130.010-3	05-013-531	05-007-917	10
12-16	954.130.012-3	05-013-532	05-007-918	12
15-19	954.130.015-3	05-013-535	05-007-919	15
17-21	954.130.017-3	05-013-537	05-007-920	17
19-23	954.130.019-3	05-013-540	05-007-711	19
22-26	954.130.022-3	05-013-543	05-007-403	22
24-28	954.130.024-3	05-013-545	05-008-071	24

Maschinen / Machines: SPS-30, SPS-50

Lens dia. range	Synline number	Base body Order No.	Membrane Order No.	DL.
27-32	954.130.027-3	05-015-612	05-008-072	27
31-35	954.130.031-3	05-056-737	05-008-073	31
33-40	954.130.033-3	05-056-738	05-014-818	33

Maschinen / Machines: SPS-50

Lens dia. range	Synline number	Base body Order No.	Membrane Order No.	DL.
36-44	954.130.679-3	05-080-582	05-008-074	36
40-48	954.130.680-3	05-080-583	05-008-075	40
44-52	954.130.681-3	05-080-596	05-007-712	44
48-56	954.130.682-3	05-080-598	05-007-713	48

SEAL LIPS

Satisloh offers suitable seal lips to the corresponding receptions of optical lenses. Below you will find our standard seal lips which are in stock.
Other forms and types of seal lips are available on customer request

SEAL LIPS

Seal lips for vacuum chucks

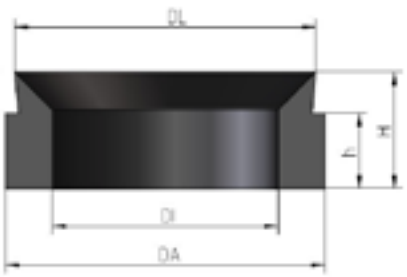

Drawing number	Part number	DA	DL	DI	H	h
951-40.006	05-007-106	6,5	6	3,5	4,75	3,5
951-40.008	05-007-107	8	8	5,5	4,75	3,5
951-40.010	05-006-039	10	8	5,5	4,75	3,5
951-40.013	05-005-495	13	10,2	8	5,3	4
951-40.014	05-005-876	15	14	11	6,3	5
951-40.015	05-005-496	15	13,2	10	6,3	5
951-40.016	05-007-529	16	15	12	6,2	5
951-40.017	05-005-498	17	16	12	6,2	4
951-40.019	05-005-499	19	17	12	7,4	5
951-40.022	05-005-502	22	21	17	7	5
951-40.024	05-005-516	24	23,5	19	7,4	5
951-40.025	05-009-493	24	23,5	19	7,4	5
951-40.026	05-003-153	26	24	19	7	5
951-40.028	05-003-491	28	26	21	7,3	5
951-40.029	05-004-615	30	29	25	7	5
951-40.030	05-005-553	30	28	23	7	5
951-40.032	05-005-991	34	32	27	7,5	5
951-40.034	05-005-554	34	34	29	7	5
951-40.035	05-005-001	35	33	28	7	5
951-40.039	05-003-152	39	37	32	7	5
951-40.043	05-005-052	43	41	36	7	5
951-40.046	05-005-556	46	44	39	7,5	5
951-40.048	05-001-838	48	46	41	7,5	5
951-40.051	05-003-247	51	49	44	6,8	5
951-40.053	05-003-309	53	51	46	6,8	5
951-40.056	05-004-971	56	54	49	7	5
951-40.058	05-003-206	58	56	51	7,2	5
951-40.061	05-006-931	61	59	54	7,2	5
951-40.063	05-000-077	63	61	56	6,8	5
951-40.066	05-003-308	66	64	59	7,5	5
951-40.072	05-003-205	72	70	65	7,3	5
951-40.085	05-003-204	85	83	78	6,8	5
951-40.100	05-003-203	100	98	93	6,8	5
951-40.116	05-003-202	116	115	107	9,7	7
951-40.140	05-003-201	140	138	130	9,7	7
951-40.160	05-003-200	160	158	150	9,7	6
951-40.180	05-006-932	180	178	170	9,7	6
951-40.200	05-009-782	200	197	190	9,7	6
951-40.230	05-017-001	230	227	220	9,7	6
951-40.260	05-017-002	260	257	250	9,7	6

SEAL LIPS

Seal lips for polishing chucks form A

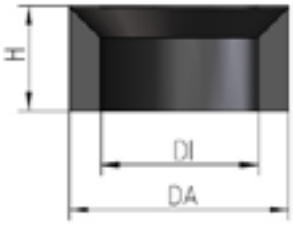

Drawing number	Part number	DA	DI	H
951.140.026	05-012-872	3	1,5	5
951.140.051	05-012-874	5	2,5	6
951.140.071	05-012-876	7	3	8
951.140.091	05-012-878	9	4	9
951.140.111	05-012-880	11	5	10
951.140.131	05-012-882	13	7	10
951.140.151	05-012-884	15	9	10
951.140.171	05-012-886	17	11	10
951.140.191	05-012-888	19	13	10
951.140.211	05-012-890	21	15	10
951.140.231	05-012-892	23	17	10
951.140.251	05-012-894	25	19	10
951.140.271	05-012-896	27	21	10
951.140.291	05-012-898	29	23	10
951.140.311	05-013-206	31	23	12
951.140.331	05-013-208	33	25	12
951.140.351	05-013-210	35	27	12
951.140.371	05-013-212	37	29	12
951.140.391	05-013-214	39	31	12
951.140.411	05-013-216	41	31	14
951.140.431	05-013-218	43	33	14
951.140.451	05-013-220	45	35	14
951.140.471	05-013-222	47	37	14
951.140.491	05-013-224	49	39	14
951.140.511	05-013-226	51	41	14
951.140.531	05-013-228	53	43	14
951.140.551	05-013-230	55	45	14
951.140.571	05-013-232	57	47	14
951.140.591	05-013-234	59	49	14
951.140.611	05-013-236	61	51	14
951.140.641	05-013-238	64	52	16
951.140.681	05-013-240	68	56	16
951.140.721	05-013-242	72	60	16
951.140.761	05-013-244	76	64	16
951.140.801	05-013-246	80	68	16
951.140.841	05-013-248	84	70	18
951.140.881	05-013-250	88	74	18
951.140.921	05-013-252	92	78	18
951.140.961	05-013-254	96	82	18
951.140.103	05-013-256	100	86	20
951.140.104	05-013-258	104	88	20
951.140.108	05-013-260	108	92	20
951.140.112	05-013-262	112	96	20
951.140.116	05-013-264	116	100	20
951.140.123	05-013-266	120	104	20
951.140.126	05-013-268	126	108	22
951.140.134	05-013-270	134	116	22
951.140.142	05-013-272	142	124	22
951.140.153	05-013-274	150	132	22

SEAL LIPS

Seal lips for polishing chucks form B

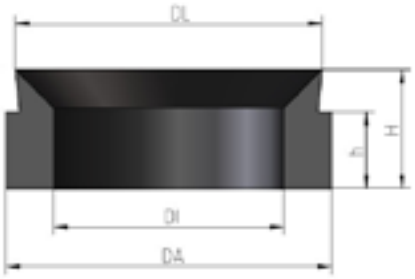

Drawing number	Part number	DL	DA	DI	H	h
951.140.026	05-012-871	2,5	3	1,5	5	4
951.140.041	05-012-873	4	5	2,5	6	4
951.140.061	05-012-875	6	7	3	8	5
951.140.081	05-012-877	8	9	4	9	5
951.140.101	05-012-879	10	11	5	10	5
951.140.121	05-012-881	12	13	7	10	5
951.140.141	05-012-883	14	15	9	10	5
951.140.161	05-012-885	16	17	11	10	5
951.140.181	05-012-887	18	19	13	10	5
951.140.201	05-012-889	20	21	15	10	5
951.140.221	05-012-891	22	23	17	10	5
951.140.241	05-012-893	24	25	19	10	5
951.140.261	05-012-895	26	27	21	10	5
951.140.281	05-012-897	28	29	23	10	5
951.140.302	05-013-205	30	31	23	12	6
951.140.321	05-013-207	32	33	25	12	6
951.140.341	05-013-209	34	35	27	12	6
951.140.361	05-013-211	36	37	29	12	6
951.140.381	05-013-213	38	39	31	12	6
951.140.401	05-013-215	40	41	31	14	7
951.140.421	05-013-217	42	43	33	14	7
951.140.441	05-013-219	44	45	35	14	7
951.140.461	05-013-221	46	47	37	14	7
951.140.481	05-013-223	48	49	39	14	7
951.140.501	05-013-225	50	51	41	14	7
951.140.521	05-013-227	52	53	43	14	7
951.140.541	05-013-229	54	55	45	14	7
951.140.561	05-013-231	56	57	47	14	7
951.140.581	05-013-233	58	59	49	14	7
951.140.601	05-013-235	60	61	51	14	7
951.140.621	05-013-237	62	64	52	16	8
951.140.661	05-013-239	66	68	56	16	8
951-40.100	05-003-203	100	98	93	6,8	5
951-40.116	05-003-202	116	115	107	9,7	7
951-40.140	05-003-201	140	138	130	9,7	7
951-40.160	05-003-200	160	158	150	9,7	6
951-40.180	05-006-932	180	178	170	9,7	6
951-40.200	05-009-782	200	197	190	9,7	6
951-40.230	05-017-001	230	227	220	9,7	6
951-40.260	05-017-002	260	257	250	9,7	6
05-013-241	951.140.701	70	72	60	16	8
05-013-243	951.140.741	74	76	64	16	8
05-013-245	951.140.781	78	80	68	16	8
05-013-247	951.140.821	82	84	70	18	9
05-013-249	951.140.861	86	88	74	18	9
05-013-251	951.140.901	90	92	78	18	9
05-013-253	951.140.941	94	96	82	18	9
05-013-255	951.140.981	98	100	86	18	9
05-013-257	951.140.102	102	104	88	20	10
05-013-259	951.140.106	106	108	92	20	10
05-013-261	951.140.113	110	112	96	20	10
05-013-263	951.140.114	114	116	100	20	10
05-013-265	951.140.118	118	120	104	20	10
05-013-267	951.140.122	122	126	108	22	11
05-013-269	951.140.133	130	134	116	22	11
05-013-271	951.140.138	138	142	124	22	11
05-013-273	951.140.146	146	150	132	22	11

MEMBRANES

For each reception of optical lenses Satisloh offers suitable membranes. Below you will find our standard membranes which are in stock. We also offer other forms and types of our membranes on customer request.

MEMBRANES

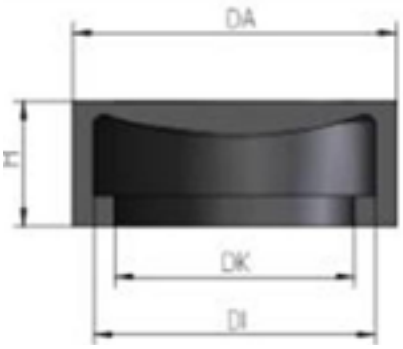

Drawing number	Part number	DA	DI	DK	H
951.042.010	05-007-917	10	8	6	8
951.042.012	05-007-918	12	10	8	8
951.042.015	05-007-919	15	12	9	10
951.042.017	05-007-920	17	14	11	10
951.042.019	05-007-711	19	16	13	12
951.042.022	05-007-403	22	18	15	12
951.042.024	05-008-071	24	20	16	12
951.042.027	05-008-072	27	23,5	19	12
951.042.031	05-008-073	31	27	23	12
951.042.033	05-014-818	33	29	25	12
951.042.036	05-008-074	36	32	26	12
951.042.040	05-008-075	40	36	30	12
951.042.044	05-007-712	44	40	36	12
951.042.048	05-007-713	48	44	40	12
951.042.054	05-008-076	54	50	47	12
951.042.056	05-007-714	56	52	48	12
951.042.060	05-007-715	60	56	50	12
951.042.064	05-008-077	64	60	56	12
951.042.068	05-008-078	68	64	60	12
951.042.072	05-008-079	72	68	64	12
951.042.076	05-008-080	76	82	66	12
951.042.080	05-008-081	80	76	72	12
951.042.085	05-007-706	85	81	77	12
951.042.092	05-007-922	92	88	84	12
951.042.100	05-007-966	100	96	90	12
951.042.114	05-007-707	114	108	101	21
951.042.120	05-007-716	120	114	108	21
951.042.132	05-007-967	132	126	119	21
951.042.146	05-007-717	146	140	133	21
951.042.716	05-079-490	168	162	155	21
951.042.200	05-016-454	200	194	187	20,5
951.042.220	05-016-614	220	214	208	20,5
951.042.240	05-016-615	240	234	228	20,5
951.042.260	05-017-473	260	254	248	20,5
951.042.280	05-017-474	280	274	268	20,5

MEMBRANES

Membranes with seal lip

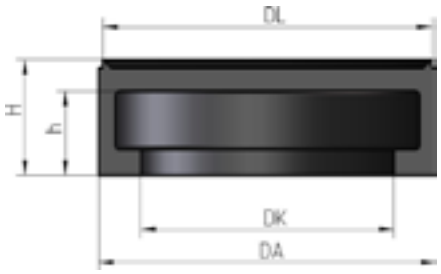

Drawing number	Part number	DA	DL	DK	H	h
951-42.010	05-009-456	10	8,5	6	13,5	10,5
951-42.012	05-009-603	12	11	8	13,5	10,5
951-42.015	05-003-156	15	14	9	13,5	10,5
951-42.017	05-005-970	17	15,8	11	13,7	10,5
951-42.019	05-003-163	19	17,5	13	13,7	10
951-42.022	05-003-164	22	19	15	13,7	10
951-42.024	05-006-045	24	22,6	16	13,7	10
951-42.027	05-003-441	27	26	19	13,7	10,2
951-42.029	05-003-495	29	27	21	13,7	10
951-42.031	05-005-897	31	29	23	14	10
951-42.033	05-005-558	33	31	25	13,7	10
951-42.036	05-004-208	36	35,5	26	13,7	10
951-42.040	05-003-375	40	39	30	13,7	10
951-42.044	05-003-440	44	43	36	13,7	10
951-42.048	05-003-492	48	46	40	14	10
951-42.054	05-004-322	54	50	47	13,7	10
951-42.056	05-003-248	56	56	48	14	10,5
951-42.060	05-005-065	60	58	50	14	10
951-42.064	05-007-065	64	61	56	13,6	9,8
951-42.076	05-005-726	76	74	66	14	10
951-42.085	05-010-725	85	83	77	14	10
951-42.092	05-007-066	92	88	82	14	10

SPHERICAL POLISHING TOOLS

Polishing tools and polishing foils

Satisloh offers suitable polishing tools with customized radius to each polishing machine.

Polishing foils and polishing foil blanks are available on request

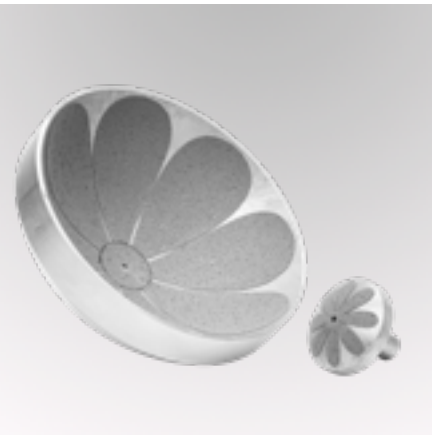

NOVOTEX ROF

Part number	Diameter	Length
10-001-915	15	1000 mm
10-001-916	25	1000 mm
10-001-917	35	1000 mm

ASPHERICAL POLISHING TOOLS

ASPHERICAL POLISHING TOOLS

Aspherical Torx Tool Part No. 02-052-699

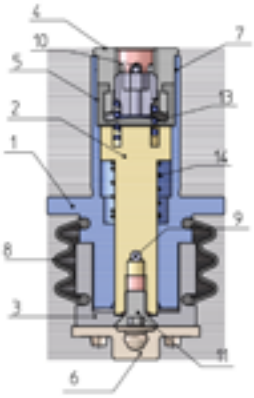

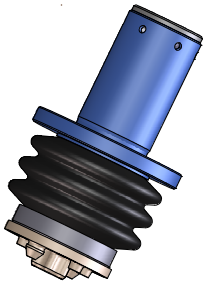

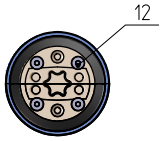

ASP Membrane polishing tool

Part number	Pos.	Product
05-053-496	1	ASP- Kombi base body
05-053-497	2	ASP Kombi piston
05-053-498	3	ASP- Kombi bush
05-053-499	4	ASP Kombi holder
05-007-403	5	Membrane dia.22
05-053-811	6	Torx support
05-053-500	7	Scrub screw M12x12 Perforated
50-050-381	8	Boot
35-001-603	9	Cylindrical pin DIN 7 3m6x20 V2A
35-001-434	10	Grub screw DIN 914 M4x6 V2A
35-001-724	11	Screw DIN 7991 M6x10 V2A
35-900-076	12	Screw DIN 7991 M3x8 V2A
35-001-735	13	Pressure spring D-207KA
35-051-186	14	Pressure spring VD-117J

Accessory Aspherical Torx Tool

Part number	Product
05-051-388	Tool cap (Torx)
90-050-782	Double-sided adhesive tape 50 m x 50 mm
75-050-190	Hollow punch tooling Set dia.3-30mm in a case
92-008-030	Rubber A 35 beige / brown 500x250mm / For higher processing pressure
92-008-029	Rubber HY / CR / middle black / 2 x 1 m
92-008-504	Diamond foil Dia. 300mm- 15µ self-adhesive
92-000-433	Contact adhesive Pattex / 125g Dangerous good / UN-No.: 1133/class: 3/no.: 5b
92-000-170	Polishing foil 135 / 0,81mm 58x144 cm / Form 00200
92-000-171	Polishing foil 135 / 1,27mm 58x144 cm / Form 00200

Aspherical Torxtool

ASPHERICAL POLISHING TOOLS

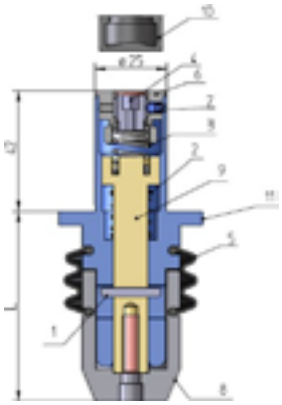

ASP piston tool L=66 Part No.: 02-053-090

Part No.	Pos.	Product
35-001-603	1	Cylindrical pin DIN 7 3m6x20 V2A
35-051-186	2	Pressure spring VD-117
35-001-735	3	Pressure spring D-207
05-053-500	4	Scrub screw M12x12 Perforated
50-050-381	5	Bellow
05-053-499	6	ASP Kombi holder
35-001-434	7	Grub screw DIN 914 M4x6 V2A
05-054-294	8	ASP polishing tool bush
05-054-295	9	ASP polishing tool piston
05-007-403	10	Membrane dia.22
05-054-296	11	ASP polishing tool base body

ASP Piston tool L=53 Part No.: 02-053-091

Part No.	Pos.	Product
35-001-603	1	Cylindrical pin DIN 7 3m6x20 V2A
35-051-186	2	Pressure spring VD-117
35-001-735	3	Pressure spring D-207
05-053-500	4	Scrub screw M12x12 Perforated
50-050-381	5	Bellow
05-053-499	6	ASP Kombi holder
35-001-434	7	Grub screw DIN 914 M4x6 V2A
05-054-300	8	ASP polishing tool bush
05-054-299	9	ASP polishing tool piston
05-007-403	10	Membrane dia.22
05-054-298	11	ASP polishing tool base body

ASP Piston Tool L=35 Part No.: 02-053-520

Part No.	Pos.	Product
35-001-603	1	Cylindrical pin DIN 7 3m6x20 V2A
35-051-186	2	Pressure spring VD-117
35-001-735	3	Pressure spring D-207
05-053-500	4	Scrub screw M12x12 Perforated
50-050-381	5	Bellow
05-053-499	6	ASP Kombi holder
35-001-434	7	Grub screw DIN 914 M4x6 V2A
05-053-812	8	ASP polishing tool bush
05-053-497	9	ASP polishing tool piston
05-007-403	10	Membrane dia.22
05-053-496	11	ASP polishing tool base body

ASP Piston Tool L=29 Part No.: 02-053-143

Part No.	Pos.	Product
35-001-603	1	Cylindrical pin DIN 7 m6x20 V2A
35-051-186	2	Pressure spring VD-117
35-001-735	3	Pressure spring D-207
05-053-500	4	Scrub screw M12x12 Perforated
50-050-381	5	Bellow
05-053-499	6	ASP Kombi holder
35-001-434	7	Grub screw DIN 914 M4x6 V2A
05-054-362	8	ASP polishing tool bush
05-054-631	9	ASP polishing tool piston
05-007-403	10	Membrane dia.22
05-054-360	11	ASP polishing tool base body

Polishing pin for ASP piston tool

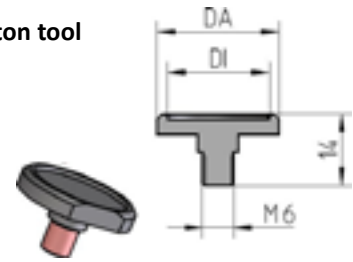

Part No.	DA	DI
05-054-357	14	10
05-054-358	24	20
05-054-359	34	30

ASPHERICAL POLISHING TOOLS

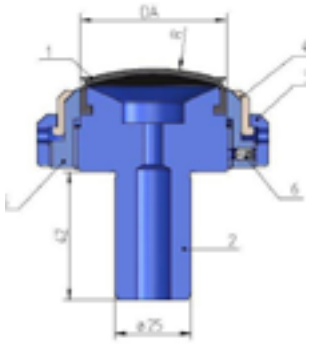

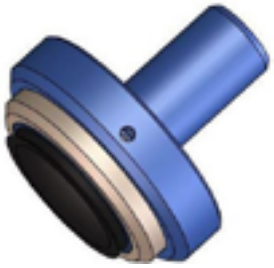

Membrane polishing tool DO12 R=12
Part No.: 02-058-582

Part No.	Pos.	Product
05-008-135	1	Membrane DA 12
05-060-601	2	Flange
05-056-678	3	Clamping ring outside
05-056-676	4	Clamping ring

Membrane polishing tool DO20 R=18
Part No.: 02-054-410

Part No.	Pos.	Product
05-005-875	1	Membrane DA 20
05-056-092	2	Flange
05-056-093	3	Clamping ring outside
05-056-095	4	Clamping ring
05-056-096	5	Clamping ring inside
35-000-669	6	Scrub screw DIN 913 M4x6 V2A

Membrane polishing tool DO36 R=34
Part No.: 02-054-419

Part No.	Pos.	Product
05-004-374	1	Membrane DA 36
05-056-125	2	Flange
05-056-126	3	Clamping ring outside
05-056-127	4	Clamping ring
05-056-128	5	Clamping ring inside
35-000-645	6	Scrub screw DIN 913 M4x8 V2A

Membrane polishing tool DO48 R=70
Part No.: 02-054-395

Part No.	Pos.	Product
05-004-210	1	Membrane DA 48
05-056-074	2	Flange
05-056-075	3	Clamping ring outside
05-056-076	4	Clamping ring
05-056-077	5	Clamping ring inside
35-000-669	6	Scrub screw DIN 913 M4x6 V2A

Membrane polishing tool DO60 R=95
Part No.: 02-054-418

Part No.	Pos.	Product
05-006-469	1	Membrane DA 60
05-056-116	2	Flange
05-056-117	3	Clamping ring outside
05-056-118	4	Clamping ring
05-056-119	5	Clamping ring inside
35-001-488	6	Scrub screw DIN 913 M4x8 V2A

ADAPT TOOLS

ADAPT is available for Satisloh polishing machines
Depending on your needs, we offer three different ADAPT software modules (detailed information found in ADAPT brochure), tools in four different sizes (R=80, R = 40, R = 20 and R = 10) and suitable accessories. Below is an overview of our range of ADAPT tools

ADAPT TOOLS

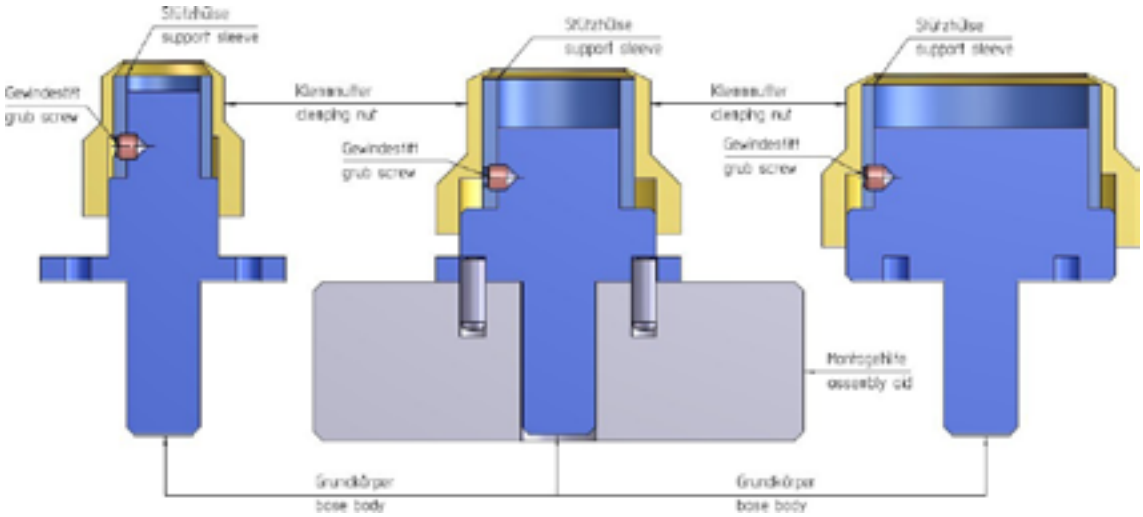

ADAPT Tool R=40 Hyd.12x25 Part No.: 02-073-625

Part No.	Product
05-080-411	ADAPT base body
05-080-399	ADAPT clamping nut R=40
05-080-402	ADAPT support sleeve R=40

ADAPT Tool R=20 Hyd.12x25 Part No.: 02-073-621

Part No.	Product
05-080-408	ADAPT base body R=20
05-080-398	ADAPT clamping nut R=20
05-080-401	ADAPT support sleeve R=20

ADAPT Tool R=10 Hyd.12x25 Part No.: 02-073-619

Part No.	Product
05-080-395	ADAPT base body R=10
05-080-397	ADAPT clamping ring R=10
05-080-400	ADAPT cap nut R=10

Part No.	Product
02-073-638	Assembly aid ADAPT HD 12x25

ADAPT TOOLS

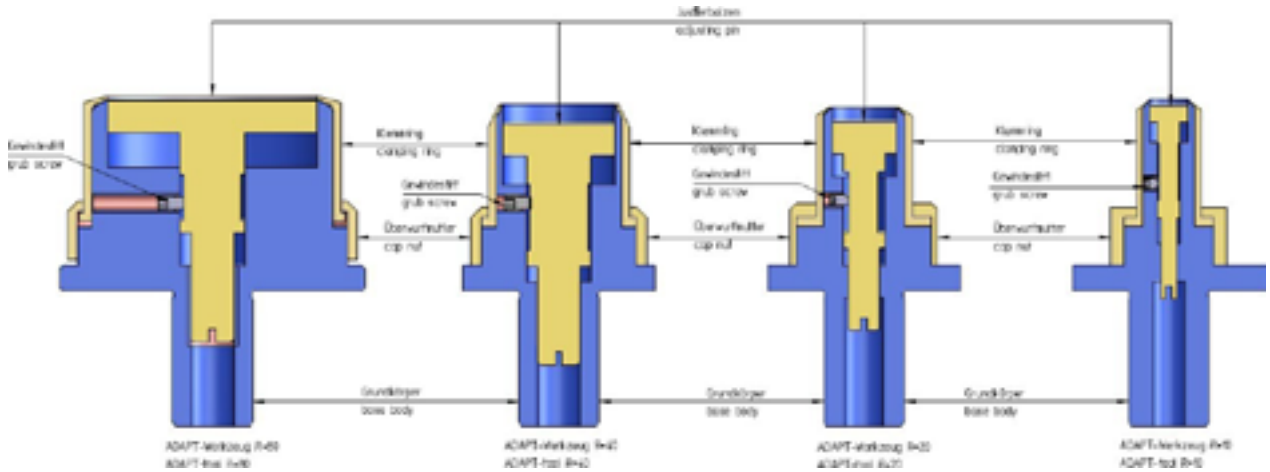

ADAPT Tool R=80 Hyd.25x42 with adjusting pin
Part No.: 02-061-965

Part No.	Product
05-064-311	ADAPT adjusting pin R=80
05-064-312	ADAPT base body R=80
05-064-316	ADAPT clamping ring R=80
05-064-313	ADAPT cap nut R=80

ADAPT Tool R=40 Hyd.25x42 with adjusting pin
Part No.: 02-060-074

Part No.	Product
05-061-990	ADAPT adjusting pin R=80
05-061-993	ADAPT base body R=80
05-061-991	ADAPT clamping ring R=80
05-061-992	ADAPT cap nut R=80

ADAPT Tool R=20 Hyd.25x42 with adjusting pin
Part No.: 02-059-587

Part No.	Product
05-061-511	ADAPT adjusting pin R=20
05-061-513	ADAPT base body R=20
05-061-515	ADAPT clamping ring R=20
05-061-516	ADAPT cap nut R=20

ADAPT Tool R=10 Hyd.25x42 with adjusting pin
Part No.: 02-060-058

Part No.	Product
05-061-965	ADAPT adjusting pin R=10
05-061-969	ADAPT base body R=10
05-061-966	ADAPT clamping ring R=10
05-061-967	ADAPT cap nut R=10

Part No.	Product
02-074-117	ADAPT Tool R=5 with adjusting pin

ADAPT Tool HSK-40 for G-machine R=40
Part No: 02-071-193

Part No.	Product
05-019-418	Tool flange HSK-40E L=82
05-077-773	ADAPT base body R=40 For HSK-40E
05-061-991	ADAPT clamping ring R=40
05-061-992	ADAPT cap nut R=40
75-000-673	Coolant tube HSK-40E

ADAPT Tool HSK-40 for G-machine R=20
Part number: 02-071-203

Part No.	Product
05-019-418	Tool flange HSK-40E L=82
05-077-789	ADAPT base body R=20 For HSK-40E
05-061-515	ADAPT clamping ring R=20
05-061-516	ADAPT cap nut R=20
75-000-673	Coolant tube HSK-40E

ADAPT Tool HSK-40 for G-machine R=10
Part No: 02-071-207

Part No.	Product
05-019-418	Tool flange HSK-40E L=82
05-077-790	ADAPT base body R=10 For HSK-40E
05-061-966	ADAPT clamping ring R=10
05-061-967	ADAPT cap nut R=10
75-000-673	Coolant tube HSK-40E

ADAPT TOOLS

Pin polishing Tool

Pin polishing Tool HD12x25 Part No.: 02-078-751

Part No.	Product
05-081-977	Clamping nut pin polishing tool
05-087-122	Pin polishing tool base body Hyd12x25
02-078-750	Guide pin dia.6 rod dia.1 complete
02-078-748	Guide pin dia.6 rod dia.2 complete
02-078-749	Guide pin dia.6 rod dia.3 complete
02-078-747	Guide pin dia.6 rod dia.5 complete

PIN Polishingtool HD25x42 Part No.: 02-078-754

Part No.	Product
05-081-977	Clamping nut pin polishing tool
05-087-597	Pin polishing tool base body Hyd25x42
02-078-750	Guide pin dia.6 rod dia.1 complete
02-078-748	Guide pin dia.6 rod dia.2 complete
02-078-749	Guide pin dia.6 rod dia.3 complete
02-078-747	Guide pin dia.6 rod dia.5 complete

ADAPT PRIME TOOLS

ADAPT Prime Tool R40

Part No.	Product
05-087-664	Flange Hyd.25x42
05-086-678	Polishing cup Ø46 M10 R32.7
02-078-992	Hollow punch D65+D56
02-077-455	Adhesive device for R40

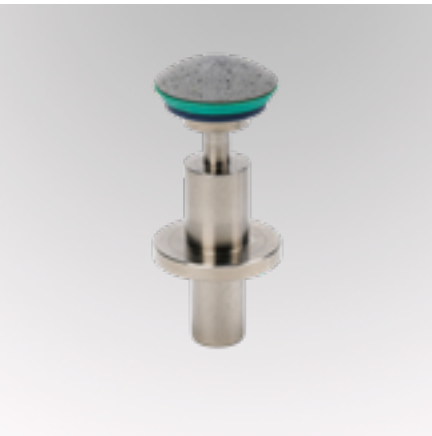

ADAPT Prime Tool R28

Part No.	Product
05-087-664	Flange Hyd.25x42
05-086-402	Polishing cup Ø37 M10 R20
02-079-022	Hollow punch D50+D46
02-079-740	Adhesive device for R28

Accessories for ADAPT Prime tools

Part No.	Product
02-077-197	Molding plate 9x R28 / R40
02-081-778	Molding plate single R28 / R40
05-087-664	Flansch Polierschale M10 HD25x42
05-085-216	Flansch Polierschale M10 HD12x25
92-010-148	Dressing tool D181 HD 25x42 D=40mm
92-009-330	Supporting foam Green SL hardness 1,4
92-009-328	Supporting foam Grey SL hardness 1,5
92-000-170	Polishing foil 135 / 0,81 mm 58 x 144 cm/ Form 00200
92-000-171	Polishing foil 135 / 1.27 mm 58 x 144 cm / Form 002000
92-000-183	Polishing foil 166 / 0.81 mm 58 x 140 cm / Form 002000
92-000-182	Polishing foil 166 / 0.51 mm 58 x 140 cm / Form 002000
92-015-871	SmartPen 5011 super glue 30g UN-No.: 3334/class: 9/no.: 3
92-000-433	Contact adhesive Pattex / 125g Dangerous good UN-No.: 1133/class: 3/no.: 5b

Heat protection gloves available on request. Please let us know your size (8/9/10/11).

ADAPT ACCESSORIES

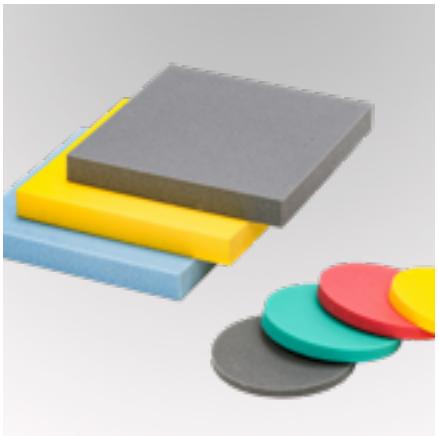

Supporting foam 300x150x12 For tool R=80

Part No.	Product
92-010-149	Brown SL hardness 1,0
92-010-360	Yellow SL hardness 1,1
92-010-150	Red SL hardness 1,2
92-010-153	Green SL hardness 1,4
92-010-151	Grey SL hardness 1,5
92-010-152	Blue SL hardness 2,0

Supporting foam 300x150x12 For tool R=40 / R=20

Part No.	Product
92-009-325	Brown SL hardness 1,0
92-010-359	Yellow SL hardness 1,1
92-009-327	Red SL hardness 1,2
92-009-331	Green SL hardness 1,4
92-012-636	Light blue SL hardness 1,4
92-009-329	Grey SL hardness 1,5
92-009-333	Blue SL hardness 2,0

Supporting foam 300x150x6 For tool R=10

Part No.	Product
92-009-324	Brown SL hardness 1,0
92-010-358	Yellow SL hardness 1,1
92-009-326	Red SL hardness 1,2
92-009-330	Green SL hardness 1,4
92-009-332	Blue SL hardness 2,0
92-009-328	Grey SL hardness 1,5

ADAPT ACCESSORIES

ADAPT Calibration equipment with Indexpin

Part No.	Product
02-063-911	ADAPT calibration eqipment with index pin 25x42
02-073-966	ADAPT calibration eqipment with index pin 12x25

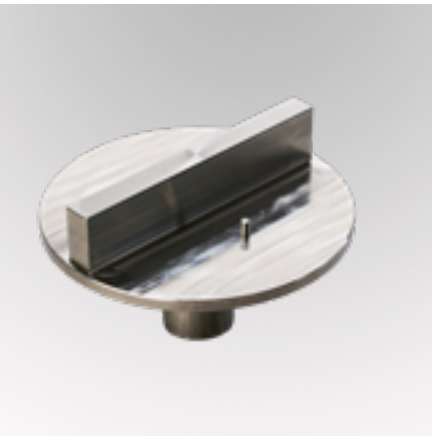

Accessories

Part No.	Product
92-010-148	Dressing tool D181 HD 25x42 D=40mm (for tool R80)
92-009-930	Dressing tool D181 HD 25x42 D=25mm (for tool R40)
92-009-931	Dressing tool D181 HD 25x42 D=14mm (for tool R20)
92-009-932	Dressing tool D181 HD 25x42 D=8mm (for tool R10)

Part No.	Product
92-015-032	Dressing tool D181 Z6 D=32mm (for tool R40)
92-015-033	Dressing tool D181 Z6 D=18mm (for tool R20)
92-015-034	Dressing tool D181 Z6 D=12,5mm (for tool R10)

Part No.	Product
92-000-170	Polishing foil 135 / 0,81 mm 58 x 144 cm/ Form 00200
92-000-171	Polishing foil 135 / 1.27 mm 58 x 144 cm / Form 002000
92-014-633	PU L26D 0.030 12.4 x 12.4
92-014-634	PU 3 µ 24” x 24” square TDT PC with PSA
92-014-635	PU 9 µ 24” x 24” square TDT PC with PSA
92-014-504	Diamond foil Ø 300,0 mm 15µm self-adhesive

Other polishing foils on request

Hollow punch tooling set

Part No.	Product
75-050-530	ø2-60 mm
75-050-190	Ø3-30 mm
90-050-782	Double side adhesive tape

CENTERING CHUCKS

We use centering chucks with annular precision cutting for aligning and holding the lens (workpieces) on our centering machines C-300 and C-50. Satisloh centering chucks are available in sets and individually. The standard connections HD 12 x 25 and HD 25 x 42 are in stock. Special diameters and Emuge connections are available on request.

CENTERING CHUCKS

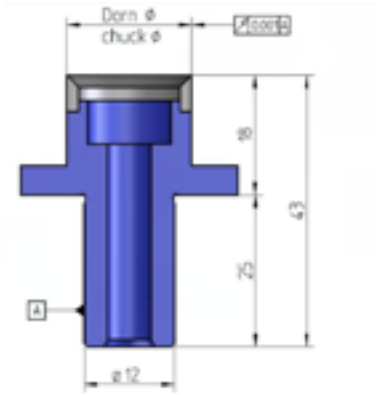

Series 0 - standard set, Centering chuck, carbide metal, CM2 / C-50 Set (1 chuck per diameter)
Part Number: 02-050-010 Hydrodehn 12 x 25

Part number	Chuck Ø
02-004-668	2,0
02-004-669	2,25
02-004-670	2,5
02-004-671	3,0
02-004-672	3,5
02-004-673	4,0
02-004-674	5,0
02-004-675	5,6
02-004-676	6,3
02-004-677	7,1
02-004-678	8,0
02-004-679	9,0

Series 1 - standard set, Centering chuck, carbide metal, CM2 / C-50 Set (1 chuck per diameter)
Part Number: 02-050-011 Hydrodehn 12 x 25

Part number	Chuck Ø
02-004-680	10.0
02-004-682	10.6
02-004-683	11.2
02-004-684	11.8
02-004-685	12.5
02-004-686	13.2
02-004-687	14.0
02-004-688	15.0
02-004-689	16.0
02-004-690	17.0
02-004-691	18.0
02-004-692	19.0
02-004-693	20.0

Series 2 - standard set, Centering chuck, carbide metal, CM2 / C-50 Set (1 chuck per diameter)
Part Number: 02-050-012 Hydrodehn 12 x 25

Part number	Chuck Ø
02-004-694	21.2
02-004-695	22.4
02-004-696	23.6
02-004-697	25.0
02-004-698	26.5
02-004-699	28.0
02-004-700	30.0
02-004-701	31.5
02-004-702	33.5
02-004-703	35.5
02-004-704	37.5
02-004-705	40.0
02-004-706	42.5
02-004-719	45.0
02-005-401	50.0

Special diameter and customized material on request. Centering chuck – repairs on request

CENTERING CHUCKS

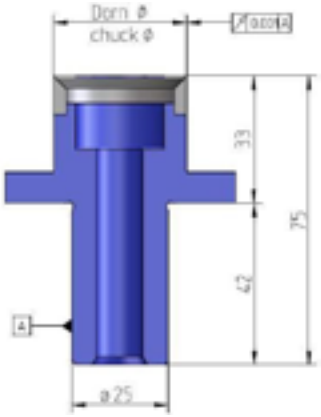

Series 1 - standard set, Centering chuck, carbide metal, C2 / C-300 Set (1 chuck per diameter)
Part Number: 02-050-013 Hydrodehn 25x42

Part number	Chuck Ø
02-006-574	10.0
02-006-575	10.6
02-006-576	11.2
02-006-577	11.8
02-006-578	12.5
02-006-579	13.2
02-006-580	14.0
02-006-581	15.0
02-006-582	16.0
02-006-583	17.0
02-006-584	18.0
02-006-585	19.0
02-006-586	20.0

Series 2 - standard set, Centering chuck, carbide metal, C2 / C-300 Set (1 chuck per diameter)
Part Number: 02-050-012 Hydrodehn 25x42

Part number	Chuck Ø
02-006-587	21,2
02-006-588	22,4
02-006-589	23,6
02-006-590	25,0
02-006-591	26,5
02-006-592	28,0
02-006-593	30,0
02-006-594	31,5
02-006-595	33,5
02-006-596	35,5
02-006-597	37,5
02-006-598	40,0
02-006-599	42,5
02-006-600	45,0
02-006-601	47,5
02-006-602	50,0

Series 3 - Standard set, Centering chuck, carbide metal, C2 / C-300 Set (1 chuck per diameter)
Part Number: 02-050-015 Hydrodehn 25 x 42

Part number	Chuck Ø
02-006-603	53,0
02-006-604	56,0
02-006-605	60,0
02-006-606	63,0
02-006-607	67,0
02-006-608	71,0
02-006-609	75,0
02-006-610	80,0
02-006-611	85,0
02-006-612	90,0
02-006-613	95,0

Series 4 - Standard set, Centering chuck, carbide metal, C2 / C-300 Set (1 chuck per diameter)
Part Number 02-050-016 Hydrodehn 25x42

Part number	Chuck Ø
02-006-614	100,0
02-006-615	106,0
02-006-616	112,0
02-006-618	118,0
02-006-619	125,0
02-006-621	132,0
02-006-622	140,0
02-006-626	150,0
02-006-628	160,0
02-006-631	175,0

Special diameter and customized material on request. Centering chuck – repairs on request

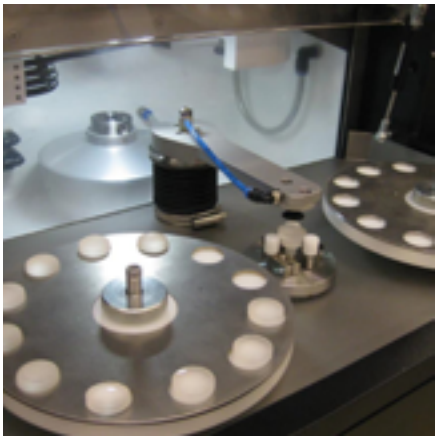

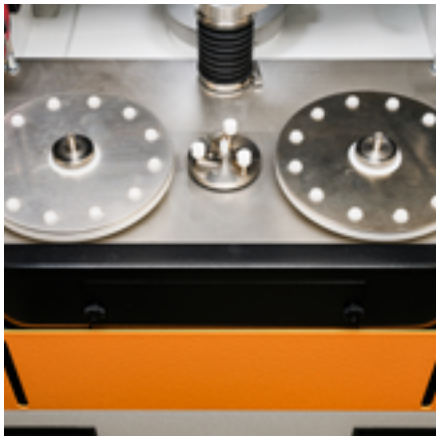

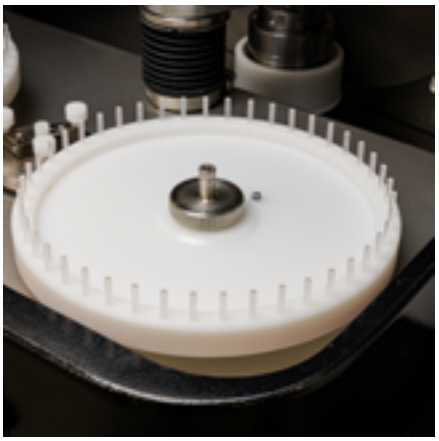

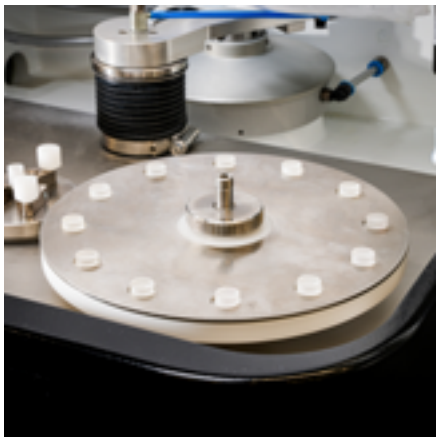

HANDLING ACCESSORIES

The compact HS-30 handling system is working with substrates from 4 to 42 mm with a positional repeatability of less than 5 microns. Satisloh offers a variety of accessories for this system.

The following chapter shows an overview of the available suction cups, palettes for the magazines, gripper fingers and receptions for the pre centering station

HANDLING ACCESSORIES

Receptions and suction cups 02-006-449

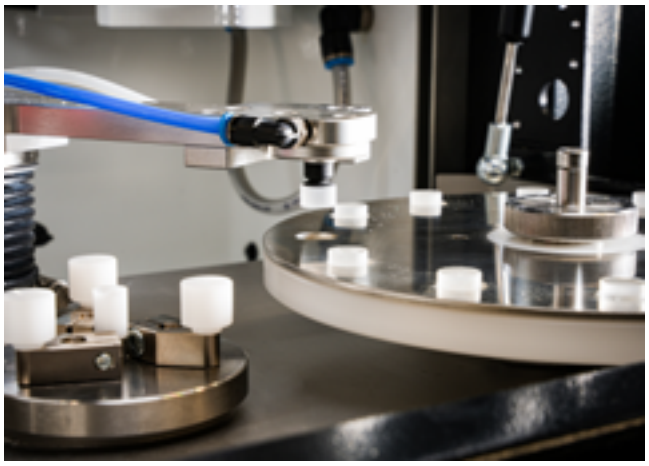

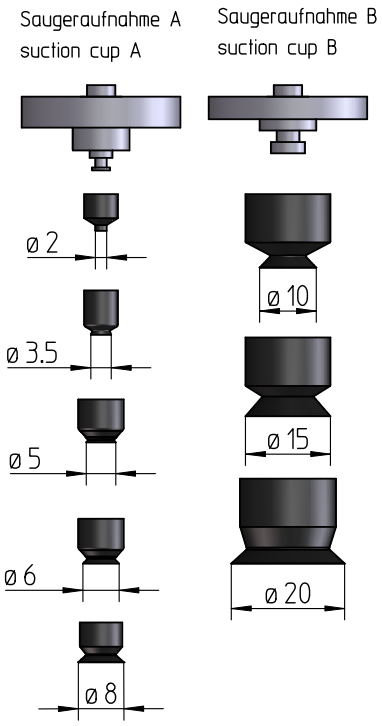

Part number	Suction cup A/B	suction Ø
25-000-749	A (05-016-761)	2
25-000-875	A (05-016-761)	3,5
25-000-750	B (05-016-761)	5
25-000-876	B (05-016-761)	6
25-000-751	B (05-016-761)	8
25-000-752	B (05-016-762)	10
25-000-753	B (05-016-762)	15
25-000-754	B (05-016-762)	20

Satisloh offers lens specific palettes (material X5CrNi189) in various configurations for handling with vacuum cups

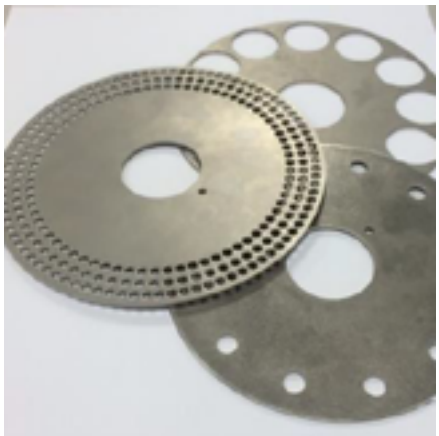

Pallets for lenses with vacuum cup

Pitch circle	1	2	3
Diameter range	2 – 46 mm	8,1- 13,5 mm	2 – 8 mm
Outside Ø	170 + 185 mm	185 mm	185 mm
Index-pin	35-000-883 (3m6 x 20)	35-000-883 (3m6 x 20)	35-000-883 (3m6 x 20)
remarks		Only possible on HS-30	

Palettes are made according to customer specification (diameter)

Part number	Ø
05-015-683	170
05-069-060	185

HANDLING ACCESSORIES

Loading arm with specific gripper finger for rod lenses and cementing chucks 02-066-559

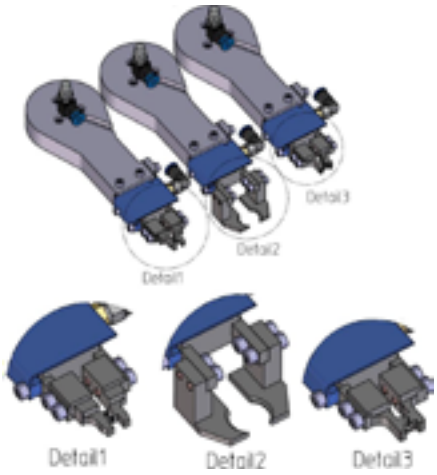

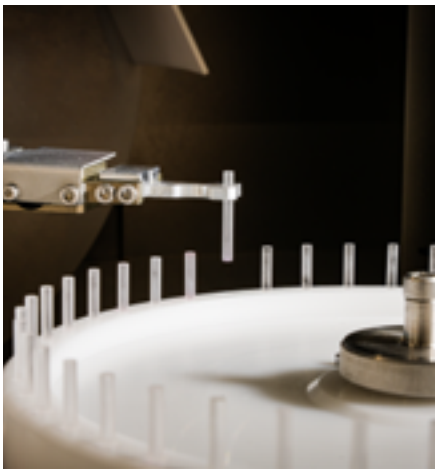

Stainless steel gripper arm are available according to customer specification
Handling unit with parallel gripper SPS-30 part number 02-067-290

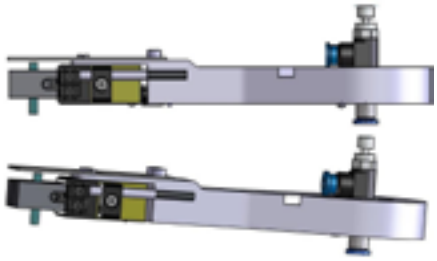

Handling unit with parallel gripper SPS-10 part number 02-069-977

Pre-aligner station parallel gripper part number 02-060-475

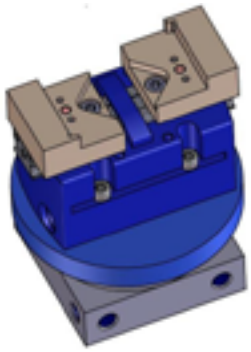

Parallelgripper stations are available according to customer specifications

UP- pre-aligner station only on customer specification

The UP- precentering station aligns the workpiece via three adapted curve segments. Thus also circular parts with stock removal or slight deviations from the ideal circular shape can be aligned.

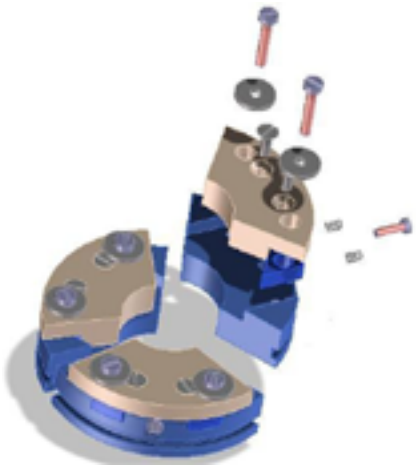

HANDLING ACCESSORIES

Part number	Product
02-060-249	pin pre-aligner station

Part number	Spare Parts
05-014-591	Fastening bolt diameter = 10
05-014-592	Fastening bolt diameter = 12
05-016-084	Adjusting piece

Receptions for pre-centering station

Part number	Ø Reception
05-015-318	2,5
05-014-594	4
05-015-317	6
05-014-595	8
05-015-316	11
05-015-315	15
05-015-314	20

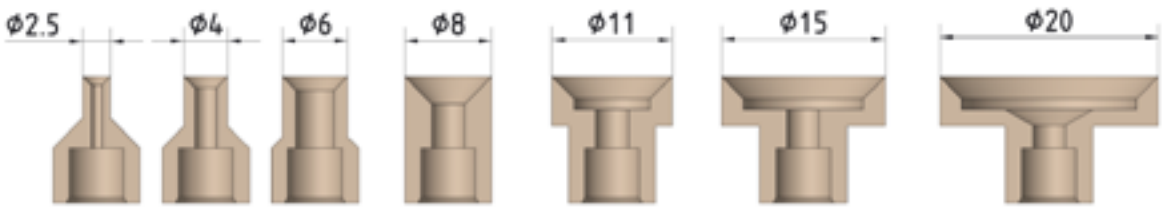

Receptions made to customer specification
Special diameters and customized materials on request.

SPHEROMETER RINGS

Spherometers consist of a dial gauge (0.01 mm or 0.001 mm) and a spherometer ring. They are used to determine the sagittal height and radius deviation for concave and convex spherical lenses. Each spherometer is equipped with a clamping ring for the dial indicator, providing a user- friendly change of the gauge.

Satisloh spherometer rings are available in a spherometer set and as single components. Sizes 5- 100mm are in stock, larger diameters are available on request.

SPHEROMETER RINGS

Spherometer rings DIN 58724

Spherometer rings, complete set, Part Number 02-001-186
ID Ø 5-90 / OD Ø 8-100 with 1 clock gauge 0.01 mm and 0.001 mm, in aluminium case with foam insert, consisting of

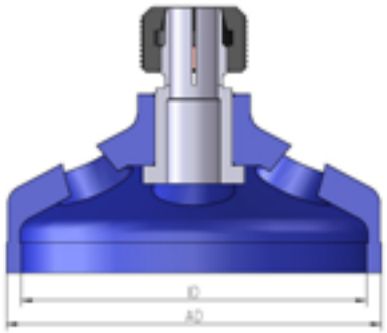

Part number	ID	AD/OD
02-001-999	5 mm	8 mm
02-002-001	8 mm	12,5 mm
02-002-003	12,5 mm	16 mm
02-002-004	16 mm	20 mm
02-002-005	20 mm	25 mm
02-002-006	25 mm	32 mm
02-002-007	32 mm	40 mm
02-002-024	40 mm	50 mm
02-002-025	50 mm	63 mm
02-002-026	63 mm	71 mm
02-002-027	71 mm	80 mm
02-002-028	80 mm	90 mm
02-002-029	90 mm	100 mm
65-000-066	Clock gauge 0.001 mm	
65-000-005	Clock gauge 0.01 mm	
02-005-183	2 sets of extensions for clock gauges 1 set = 10 pieces)	

Spherometer rings, complete set, Part Number 02-057-109
ID Ø 2-20 / OD Ø 5-25 with 1 clock gauge 0.01 mm and 0.001 mm, in aluminium case with foam insert,consisting of

Part number	ID	AD/OD
02-001-999	5 mm	8 mm
02-002-001	8 mm	12,5 mm
02-002-003	12,5 mm	16 mm
02-002-004	16 mm	20 mm
02-002-005	20 mm	25 mm
02-002-006	25 mm	32 mm
02-002-007	32 mm	40 mm
02-002-024	40 mm	50 mm
02-002-025	50 mm	63 mm
02-002-026	63 mm	71 mm
02-002-027	71 mm	80 mm
65-000-066	Clock gauge 0.001 mm	
65-000-005	Clock gauge 0.01 mm	
02-005-183	2 sets of extensions for clock gauges (1 set = 10 pieces)	

The following diameters are only available on request

Part number	ID	AD/OD
02-002-030	100 mm	112 mm
02-002-031	112 mm	125 mm
02-002-032	125 mm	140 mm
02-000-898	140 mm	160 mm
02-002-035	150 mm	170 mm
02-000-899	160 mm	180 mm
02-000-900	180 mm	200 mm
02-002-036	205 mm	225 mm
02-002-037	230 mm	250 mm
02-002-038	255 mm	275 mm

PRESSURE PINS PR-150

Part number	D	L1	L2
02-001-229	5	30,5	55,5
02-001-764	5	45	70
02-000-848	5	55,5	80,5
02-001-232	8	30,5	55,5
02-000-860	8	55,5	80,5
02-003-165	12	55,5	80,5
02-001-233	16	30,5	55,5
02-000-862	16	55,5	80,5

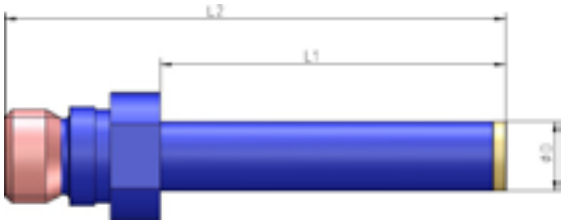

Pressure piston made to customer specification
Special diameters and customized lengths on request.

SYNLINE

Tool Calculation Program

Synline calculates and designs tools and receptions for processing spherical lenses on all Satisloh grinding and polishing machines. With Synline the job preparation is easier and less time consuming. Based on the lens data Synline calculates automatically workpiece receptions, support rings, polishing receptions and tools, etc. The program enables the graphical representation of e.g. geometries of workpieces, rings as well as angle of height and workpiece diameters.

MICRO TOOLS

Micro diamond tools for pre and fine grinding Ø 3x12 SPM-10

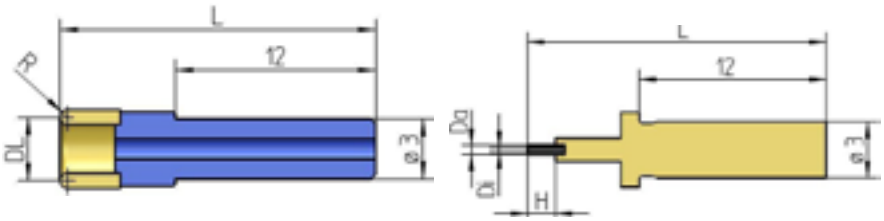

Micro diamond tools Ø 0,8-2,5 mm for pre-grinding SPM 10

Part number	specification	DL	DI	L
92-011-585	D35 MGR-MK	0,8	0,2	27
92-011-586	D35 MGR-MK	1	0,4	27
92-011-587	D35 MGR-MK	1,25	0,4	27
92-011-588	D35 MGR-MK	1,5	0,6	27
92-011-589	D35 MGR-MK	1,75	0,8	27
92-011-590	D35 MGR-MK	2	1	27
92-011-591	D35 MGR-MK	2,5	1	27
92-011-602	D35 MGR-MK	Set		

Micro diamond tools Ø 3-9 mm for pre-grinding SPM 10

Part number	specification	DL	R	L
92-011-571	D35 BZM C35	3	0,5	27
92-011-572	D35 BZM C35	4,5	0,75	27
92-011-573	D35 BZM C35	5,6	0,75	27
92-011-574	D35 BZM C35	6,3	0,75	27
92-011-575	D35 BZM C35	7,1	0,75	27
92-011-576	D35 BZM C35	8	0,75	27
92-011-577	D35 BZM C35	9	1	27
92-011-599	D35 BZM C35	Set		

Micro diamond tools Ø 0,8-2,5 mm for fine-grinding SPM 10

Part number	specification	DL	DI	L
92-011-592	D15 MGR-MK	0,8	0,2	27
92-011-593	D15 MGR-MK	1	0,4	27
92-011-594	D15 MGR-MK	1,25	0,4	27
92-011-595	D15 MGR-MK	1,5	0,6	27
92-011-596	D15 MGR-MK	1,75	0,8	27
92-011-597	D15 MGR-MK	2	1	27
92-011-598	D15 MGR-MK	2,5	1	27
92-011-603	D15 MGR-MK	Set		

Micro diamond tools Ø 3-9 mm for fine-grinding SPM 10

Part number	specification	DL	R	L
92-011-578	D10 BZM C18	3	0,5	27
92-011-579	D10 BZM C18	4,5	0,75	27
92-011-580	D10 BZM C18	5,6	0,75	27
92-011-581	D10 BZM C18	6,3	0,75	27
92-011-582	D10 BZM C18	7,1	0,75	27
92-011-583	D10 BZM C18	8	0,75	27
92-011-584	D10 BZM C18	9	1	27
92-011-601	D10 BZM C18	Set		

MICRO TOOLS WITH CERAMIC BOND

Micro diamond tools Ø 0,8-2,5 mm with ceramic bond for pre grinding (Ø 6x20) SPM 25/30/50

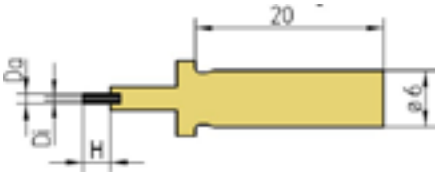

Typ MGR-MK pre grinding tools

Part number	specification	DA	DI	H	L
92-011-367	D35 MGR-MK	0,8	0,2	3	35
92-011-368	D35 MGR-MK	1	0,4	3	35
92-011-369	D35 MGR-MK	1,25	0,4	3	35
92-011-370	D35 MGR-MK	1,5	0,6	3	35
92-011-371	D35 MGR-MK	1,75	0,8	3	35
92-011-372	D35 MGR-MK	2	1	3	35
92-011-373	D35 MGR-MK	2,5	1	3	35
92-011-385	D35 MGR-MK	Set			

Typ MGR-MK fine grinding tools

Part number	specification	DA	DI	H	L
92-011-375	D15 MGR-MK	0,8	0,2	3	35
92-011-376	D15 MGR-MK	1	0,4	3	35
92-011-377	D15 MGR-MK	1,25	0,4	3	35
92-011-378	D15 MGR-MK	1,5	0,6	3	35
92-011-379	D15 MGR-MK	1,75	0,8	3	35
92-011-380	D15 MGR-MK	2	1	3	35
92-011-381	D15 MGR-MK	2,5	1	3	35
92-011-386	D15 MGR-MK	Set			

When ordering the micro-tools separately the minimum order quantity is 3 each.
Available grit sizes D6 / 9 / 25 minimum order quantity 3 Qty.
Each set contains 3 micro-tools of each diameter (3 x 8 diameters = 24 micro-tools).
When ordering the micro-tools separately the minimum order quantity is 3 each.

MICRO TOOLS WITH CERAMIC BOND

Micro diamond tools Ø 0,8-2,5 mm with ceramic bond for pre grinding (Ø 6x20) SPM 25/30

Typ MGN-MK pre grinding tools

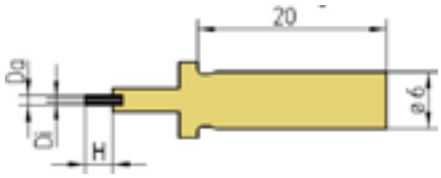

Da	H	L
0,8	3	35
1	3	35
1,25	3	35
1,5	3	35
1,75	3	35
2	3	35
2,5	3	35
3	3	35
4	3	35

When ordering the micro-tools separately the minimum order quantity is 3 each.
Available grit sizes D6 / 9 / 25 minimum order quantity 3 Qty.

MICRO TOOLS

Micro diamond tools for pre and fine grinding
DIN 58741-2 Ø 6x20 SPM-25/30/50

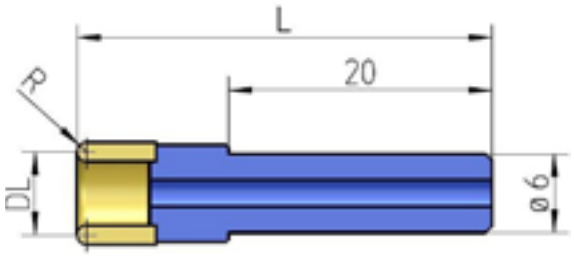

Micro diamond tools Ø 3-9 mm for pre-grinding DIN 58741-2 (Ø 6x20) SPM 25/30/50

Part number	specification	DL	R	L
92-009-212	D35 BZM C35	3	0,5	35
92-009-213	D35 BZM C35	4,5	0,75	35
92-009-214	D35 BZM C35	5,6	0,75	35
92-009-215	D35 BZM C35	6,3	0,75	35
92-009-216	D35 BZM C35	7,1	0,75	35
92-009-217	D35 BZM C35	8	0,75	35
92-009-218	D35 BZM C35	9	1	35
92-011-383	D35 BZM C35		Set	

Micro diamond tools Ø 10-25 mm for pre-grinding DIN 58741-2 (Ø 6x20) SPM 25/30/50

Part number	specification	DL	R	L
92-009-227	D46 BZM C35	10	1	35
92-009-228	D46 BZM C35	11	1	35
92-009-229	D46 BZM C35	12,5	1	35
92-009-230	D46 BZM C35	14	1	35
92-009-231	D46 BZM C35	16	1,25	35
92-009-232	D46 BZM C35	18	1,25	35
92-009-233	D46 BZM C35	20	1,25	35
92-009-234	D46 BZM C35	22	1,5	35
92-009-235	D46 BZM C35	25	1,5	35
92-009-273	D46 BZM C35		Set	

Micro diamond tools Ø 28-42 mm for pre-grinding DIN 58741-2 (Ø 6x20) SPM 50

Part number	specification	DL	R	L
92-014-920	D46 BZM C35	28	1,5	35
92-014-921	D46 BZM C35	32	1,5	35
92-014-922	D46 BZM C35	36	1,5	35
92-014-923	D46 BZM C35	40	1,5	35
92-014-924	D46 BZM C35	42	1,5	35
92-014-925	D46 BZM C35		Set	

MICRO TOOLS

Micro diamond tools Ø 3-9 mm for fine-grinding
DIN 58741-2 (Ø 6x20) SPM 25/30/50

Part number	specification	DL	R	L
92-009-292	D10 BZM C18	3	0,5	35
92-009-293	D10 BZM C18	4,5	0,75	35
92-009-294	D10 BZM C18	5,6	0,75	35
92-009-295	D10 BZM C18	6,3	0,75	35
92-009-296	D10 BZM C18	7,1	0,75	35
92-009-297	D10 BZM C18	8	0,75	35
92-009-298	D10 BZM C18	9	1	35
92-011-384	D10 BZM C18	Set		

Micro diamond tools Ø 10-25 mm for fine-grinding
DIN 58741-2 (Ø 6x20) SPM 25/30/50

Part number	specification	DL	R	L
92-009-236	D15 BZM C18	10	1	35
92-009-237	D15 BZM C18	11	1	35
92-009-238	D15 BZM C18	12,5	1	35
92-009-239	D15 BZM C18	14	1	35
92-009-240	D15 BZM C18	16	1,25	35
92-009-241	D15 BZM C18	18	1,25	35
92-009-242	D15 BZM C18	20	1,25	35
92-009-243	D15 BZM C18	22	1,5	35
92-009-244	D15 BZM C18	25	1,5	35
92-009-275	D15 BZM C18	Set		

Micro diamond tools Ø 10-25 mm for fine grinding
DIN 58741-2 (Ø 6x20) SPM 50

Part number	specification	DL	R	L
92-014-926	D15 BZM C18	28	1,5	35
92-014-927	D15 BZM C18	32	1,5	35
92-014-928	D15 BZM C18	36	1,5	35
92-014-929	D15 BZM C18	40	1,5	35
92-014-930	D15 BZM C18	42	1,5	35
92-014-931	D15 BZM C18		Set	

Diamond tools are available with other diameters and specifications on request
All diamond tools are also available with small grinding lip on request

MICRO TOOLS

Tool collet clamping diameter Z3 top spindle SPM-10

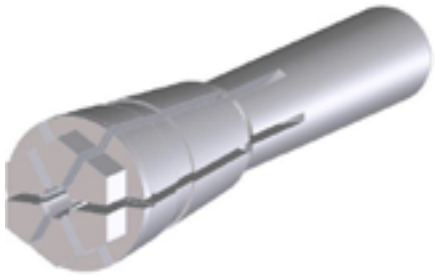

Part number	description	Part No. spindle	description spindle
60-055-426	Collet ø3	20-060-544	tool spindle Fischer/ ball bearing
05-076-071	spanner AF 6		

Tool collet clamping diameter Z6 top spindle SPM-30/50

Part No.	description	Part No. spindle	description spindle
60-054-620	Collet ø6H7	15-050-300	toolspindle Eitzenberger air bearing
60-054-621	Collet ø6H7 (rustproof)	15-050-300	toolspindle IMT/ air bearing
60-054-078	Collet A6.1, ø6, DLC	02-055-096	toolspindle Eitzenberger ball bearing

DIAMOND TOOLS HYD.25X42

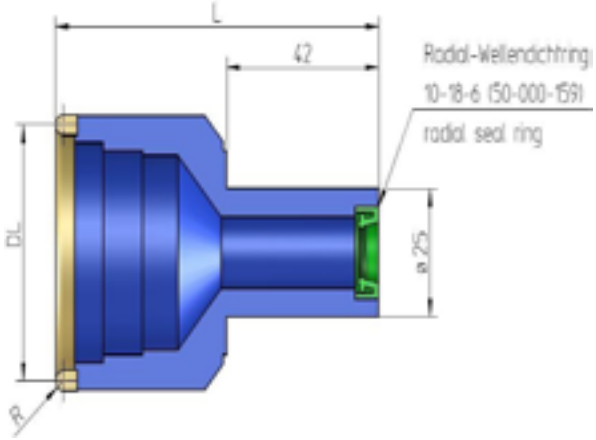

Diamond tools Ø 6,3-20 mm for pre-grinding DIN 58741-2 (Ø 25x42) SPM 55/60/125/140/150/200

Part number	specification	DL	R	L
92-007-476	D64 BZM C35	6,3	0,75	90
92-007-477	D64 BZM C35	8	0,75	90
92-007-478	D64 BZM C35	11	1	90
92-007-479	D64 BZM C35	14	1,25	90
92-007-480	D64 BZM C35	18	1,25	90
92-007-481	D64 BZM C35	20	1,25	90
92-007-579	D64 BZM C35	Set		

Set of tools comprising 6 diamond tools in workshop-type wooden box

Diamond tools Ø 6,3-20 mm for pre-grinding DIN 58741-2 (Ø 25x42) SPM 55/60/125/140/150/200

Part number	specification	DL	R	H
92-008-559	D46 BZM C35	6,3	0,75	90
92-008-560	D46 BZM C35	8	0,75	90
92-008-561	D46 BZM C35	11	1	90
92-008-562	D46 BZM C35	14	1,25	90
92-008-563	D46 BZM C35	18	1,25	90
92-008-564	D46 BZM C35	20	1,25	90
92-008-565	D46 BZM C35		Set	

Set of tools comprising 6 diamond tools in workshop-type wooden box

Diamond tools Ø 25-63 mm for pre-grinding DIN 58741-2 (Ø 25x42) SPM 60/125/140/150/200

Part number	specification	DL	R	H
92-007-482	D64 BZM C35	25	1,5	90
92-007-483	D64 BZM C35	28	1,5	90
92-007-484	D64 BZM C35	32	1,5	90
92-007-485	D64 BZM C35	36	1,5	90
92-007-486	D64 BZM C35	40	1,5	90
92-007-487	D64 BZM C35	45	1,5	90
92-007-488	D64 BZM C35	50	1,5	90
92-007-489	D64 BZM C35	56	2	90
92-007-490	D64 BZM C35	63	2	90
92-007-580	D64 BZM C35		Set	

Set of tools comprising 9 diamond tools in workshop-type wooden box

Diamond tools are available with other diameters and specifications on request

All diamond tools are also available with small grinding lip on request

DIAMOND TOOLS HYD.25X42

Diamond tools two piece up to Ø 110 mm
for pre-grinding DIN 58741-2 (Ø 25x42)

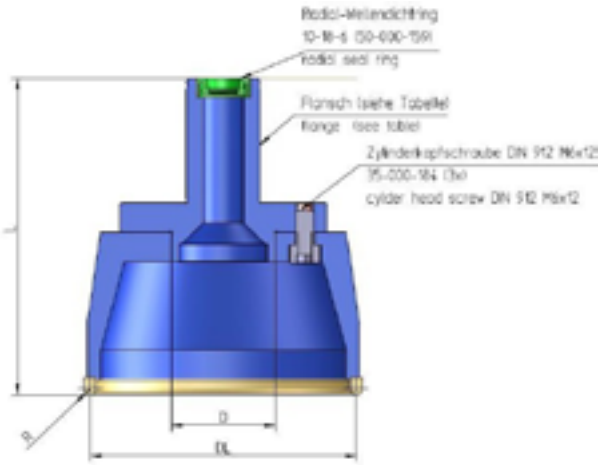

Diamond tools Ø 71-110 mm for pre-grinding DIN 58741-2 (Ø 25x42) SPM 125/140/150/200

Part number	specification	DL	R	L	D
92-008-300	D76 BZM C35	71	2	90	28
92-008-301	D76 BZM C35	80	2	90	28
92-008-302	D76 BZM C35	90	2	95	35
92-008-303	D76 BZM C35	100	2,5	100	35
92-008-304	D76 BZM C35	110	2,5	110	35
92-008-383	D76 BZM C35		Set A		

Set of tools comprising 5 diamond tools in workshop-type wooden box

All two-part tools are delivered with flange. It is not necessary to order an extra flange.

Diamond tools two piece up to Ø 180 mm
for pre-grinding DIN 58741-2 (Ø 25x42)

Diamond tools Ø 125-180 mm for pre-grinding DIN 58741-2 (Ø 25x42) SPM 140/150/200

Part number	specification	DL	R	L	D
92-008-305	D91 BZM C35	125	2,5	110	35
92-008-360	D91 BZM C35	140	2,5	116	50
92-008-361	D91 BZM C35	160	2,5	116	50
92-008-362	D91 BZM C35	180	2,5	116	50
92-008-385	D91 BZM C35		Set		

Set of tools comprising 4 diamond tools in workshop-type wooden box

All two-part tools are delivered with flange. It is not necessary to order an extra flange.

Diamond tools are available with other diameters and specifications on request

All diamond tools are also available with small grinding lip on request

Tool flange

Part number	D
05-016-586	28
05-016-585	35
05-016-229	50

DIAMOND TOOLS HYD.25X42

Diamond tools one piece up to Ø 63 mm for fine-grinding DIN 58741-2 (Ø 25x42)

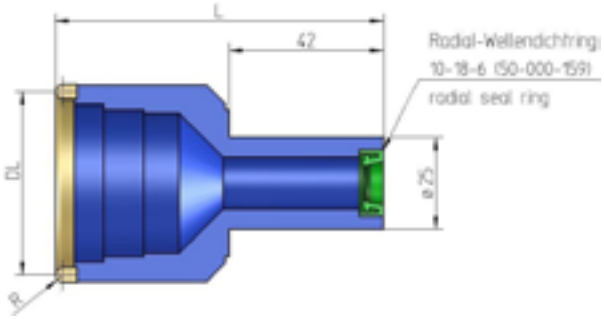

Diamond tools Ø 6,3-20 mm for fine-grinding DIN 58741-2 (Ø 25 x 42) SPM 55/60/125/140/200

Part number	specification	DL	R	L
92-007-518	D15 BZM C15	6,3	0,75	90
92-007-519	D15 BZM C15	8	0,75	90
92-002-894	D15 BZM C15	11	1	90
92-001-429	D15 BZM C15	14	1,25	90
92-001-433	D15 BZM C15	18	1,25	90
92-001-435	D15 BZM C15	20	1,25	90
92-007-581	D15 BZM C15		Set	

Set of tools comprising 6 diamond tools in workshop-type wooden box

Diamond tools Ø 25-63 mm for fine-grinding DIN 58741-2 (Ø 25 x 42) SPM 60/125/140/20

Part number	specification	DL	R	L
92-001-437	D15 BZM C15	25	1,5	90
92-007-548	D15 BZM C15	28	1,5	90
92-007-549	D15 BZM C15	32	1,5	90
92-007-550	D15 BZM C15	36	1,5	90
92-001-443	D15 BZM C15	40	1,5	90
92-007-551	D15 BZM C15	45	1,5	90
92-001-445	D15 BZM C15	50	1,5	90
92-007-552	D15 BZM C15	56	2	90
92-007-553	D15 BZM C15	63	2	90
92-007-582	D15 BZM C15		Set	

Set of tools comprising 9 diamond tools in workshop-type wooden box

Diamond tools two piece Ø 71 mm up to Ø 110 mm for fine-grinding DIN 58741-2 (Ø 25x42)

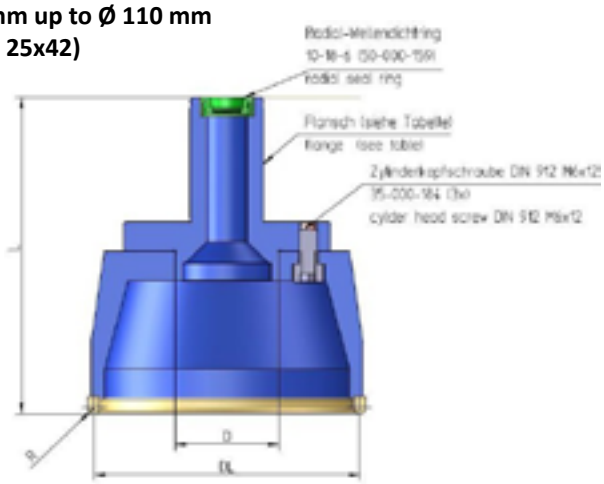

Diamond tools Ø 71-110 mm for fine-grinding DIN 58741-2 (Ø 25x42) SPM 140/150/200

Part number	specification	DL	R	L	D
92-008-363	D18 BZM C18	71	2	90	28
92-008-364	D18 BZM C18	80	2	90	28
92-008-365	D18 BZM C18	90	2	95	35
92-008-366	D18 BZM C18	100	2,5	100	35
92-008-370	D18 BZM C18	110	2,5	110	35
92-008-386	D18 BZM C18		Set		

Set of tools comprising 5 diamond tools in workshop-type wooden box

Diamond tools are available with other diameters and specifications on request

All diamond tools are also available with small grinding lip on request

All two-part tools are delivered with flange. It is not necessary to order an extra flange.

DIAMOND TOOLS HYD.25X42

Diamond tools two piece Ø 125 mm up to Ø 180 mm for fine-grinding DIN 58741-2 (Ø 25x42)

Diamond tools Ø 125-180 mm for fine-grinding DIN 58741-2 (Ø 25x42) SPM 140/150/200

Part number	specification	DL	R	L	D
92-009-841	D25 BZWSX C18-K	125	2,5	110	35
92-009-842	D25 BZWSX C18-K	140	2,5	116	50
92-009-843	D25 BZWSX C18-K	160	2,5	116	50
92-009-844	D25 BZWSX C18-K	180	2,5	116	50
92-009-845	D25 BZWSX C18		Set A		

Set of tools comprising 4 diamond tools in workshop-type wooden box

All two-part tools are delivered with flange. It is not necessary to order an extra flange.

WerkzeugFlansch / Tool flange

Part number	D
05-016-586	28
05-016-585	35
05-016-229	50

Diamond tools are available with other diameters and specifications on request

All diamond tools are also available with small grinding lip on request

DIAMOND TOOLS HSK-40

Diamond tools Ø 6,3-63 mm only with chuck holder (HSK-40-E)

Collet chuck holder HSK 40 E Part Number: 02-054-071

Part number	D
60-052-726	Collet chuck holder single
60-052-246	Collet chuck dia.12
60-052-266	Collet chuck dia.6
75-000-673	Coolant tube
60-052-247	Union nut

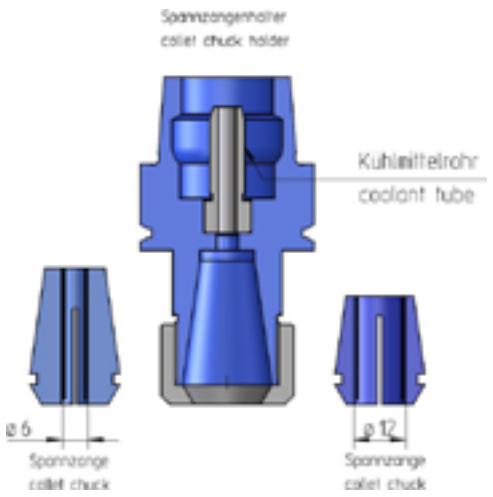

Connection HSK-40E with hyd. 25x42

Part number: 60-054-798

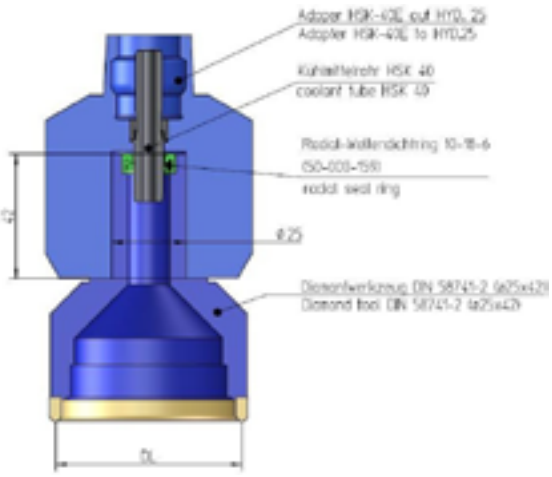

DIAMOND TOOLS HSK-40

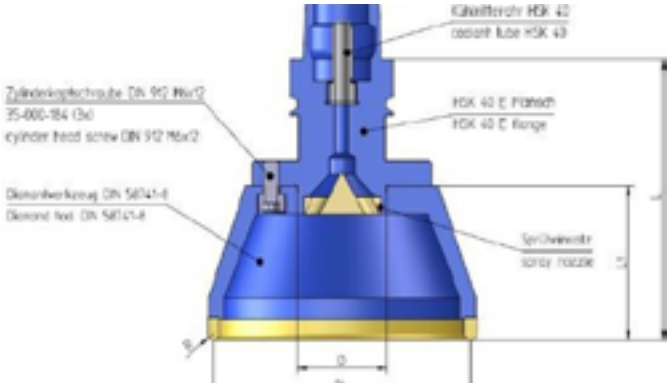

Diamond tools Ø 71-100 mm for pre-grinding DIN 58741-8 (HSK-40-E)

Part number	Spray nozzle	Flange	specification	L	DL	R	L1	D
92-014-579	05-006-753	05-016-134	D91 BZM C35	90	71	2	45	28
92-014-580	05-006-753	05-016-134	D91 BZM C35	90	80	2	45	28
92-014-581	05-007-594	05-016-135	D91 BZM C35	100	90	2	55	35
92-014-582	05-007-594	05-016-135	D91 BZM C35	100	100	2,5	55	35
92-014-583			D91 BZM C35		Set			

Diamond tools Ø 71-100 mm for fine-grinding DIN 58741-8 (HSK-40-E)

Part number	Spray nozzle	Flange	specification	L	DL	R	L1	D
92-014-584	05-006-753	05-016-134	D20 BZM C15	90	71	2	45	28
92-014-585	05-006-753	05-016-134	D20 BZM C15	90	80	2	45	28
92-014-586	05-007-594	05-016-135	D20 BZM C15	100	90	2	55	35
92-014-587	05-007-594	05-016-135	D20 BZM C15	100	100	2,5	55	35
92-014-588			D20 BZM C15		Set			

Diamond tools Ø 110-140 mm for pre-grinding DIN 58741-8 (HSK-40-E)

Part No.	Spray nozzle	Flange	specification	L	DL	R	L1	D
92-014-589	05-007-594	05-016-135	D126 BZW-SX C35	100	110	2,5	55	35
92-014-590	05-007-594	05-016-135	D126 BZW-SX C35	100	125	2,5	55	35
92-014-591	05-007-594	05-016-136	D126 BZW-SX C35	110	140	2,5	62	50
92-014-592			D126 BZW-SX C35		Set			

Diamond tools Ø 110-140 mm for fine-grinding DIN 58741-8 (HSK-40-E)

Part No.	Spray nozzle	Flange	specification	L	DL	R	L1	D
92-014-593	05-007-594	05-016-135	D25 BZW-SX C18	100	110	2,5	55	35
92-014-594	05-007-594	05-016-135	D25 BZW-SX C18	100	125	2,5	55	35
92-014-595	05-007-594	05-016-136	D25 BZW-SX C18	110	140	2,5	62	50
92-014-596			D25 BZW-SX C19		Set			

Diamond tools Ø 110-140 mm for pre-grinding DIN 58741-8 (HSK-40-E)

Part No.	Spray nozzle	Flange	specification	L	DL	R	L1	D
92-014-597	05-007-594	05-016-136	D151 BZW-SX C35	110	160	2,5	62	50
92-014-598	05-007-594	05-016-136	D151 BZW-SX C35	110	180	2,5	62	50
92-014-599			D151 BZW-SX C36		Set			

Diamond tools Ø 110-140 mm for fine-grinding DIN 58741-8 (HSK-40-E)

Part No.	Spray nozzle	Flange	specification	L	DL	R	L1	D
92-014-600	05-007-594	05-016-135	D30 BZW-SX C23	110	160	2,5	62	50
92-014-601	05-007-594	05-016-135	D30 BZW-SX C23	110	180	2,5	62	50
92-014-602		05-016-136	D30 BZW-SX C24		Set			

Diamond tools are available with other diameters and specifications on request
All diamond tools are also available with small grinding lip on request
All two-part tools are delivered with flange. It is not necessary to order an extra flange.

MICRO DRESSING TOOLS

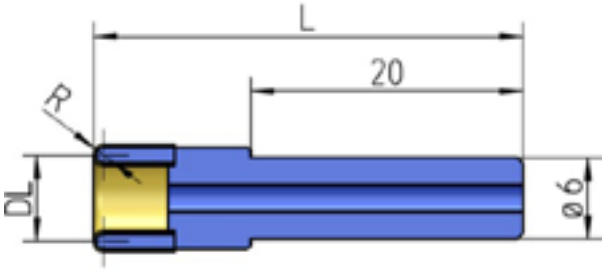

Micro dressing tools Ø 3-12,5 mm DIN 58741-5 (Ø 6x20) SPS 10/25/30/50

Part number	specification	DL	R	L
92-001-263	D 64	3	0,5	40
92-009-259	D 64	4	0,75	40
92-009-260	D 64	6,3	0,75	40
92-001-275	D 64	7,1	1	40
92-009-261	D 64	8	1	40
92-009-262	D 64	10	1	40
92-009-263	D 64	12,5	1,25	40
92-009-276	D 64	Set		

Micro dressing tools Ø 14-30 mm DIN 58741-5 (Ø 6x20) SPS 10/25/30/50

Part number	specification	DL	R	L
92-009-264	D64	14	1,25	40
92-001-289	D64	16	1,25	40
92-009-266	D64	18	1,25	40
92-009-267	D64	20	1,25	40
92-009-268	D64	22	1,5	40
92-009-269	D64	25	1,5	40
92-009-270	D64	28	1,5	40
92-009-271	D64	30	1,5	40
92-009-277	D64	Set		

Micro dressing tools Ø 32-60 mm DIN 58741-5 (Ø 6x20) SPS 50

Part number	specification	DL	R	L
92-014-871	D64	32	1,5	35
92-014-872	D64	36	1,5	35
92-014-873	D64	40	1,5	35
92-014-874	D64	45	1,5	35
92-014-875	D64	50	2	35
92-014-876	D64	56	2	35
92-014-877	D64	60	2	35
92-014-869	D64	Set		

Diamond tools are available with other diameters and specifications on request

All diamond tools are also available with small grinding lip on request

DRESSING TOOLS HYD.25X42

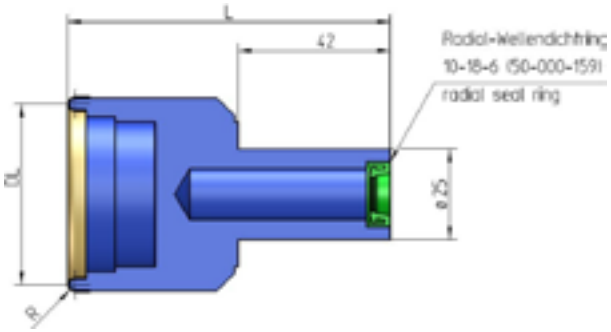

Dressing tools Ø 6,3-20 mm DIN 58741-5 (Ø 25 x 42)
SPS 55/60/125/140/150/200

Part number	specification	DL	R	L
92-007-555	D64S	6,3	1	90
92-007-556	D64S	8	1	90
92-007-557	D64S	11	1,25	90
92-007-558	D64S	14	1,25	90
92-007-559	D64S	18	1,25	90
92-006-433	D64S	20	1,25	90
92-007-583	D64S		Set	

Set of dressing tools comprising 6 dressing tools in work-shop-type wooden box

Dressing tools Ø 25-63 mm DIN 58741-5 (Ø 25x42)
SPS 60/125/140/150/200

Part number	specification	DL	R	L
92-007-560	D64S	25	1,5	90
92-007-561	D64S	28	1,5	90
92-007-562	D64S	30	1,5	90
92-007-563	D64S	32	1,5	90
92-007-564	D64S	36	1,5	90
92-006-434	D64S	40	1,5	90
92-007-565	D64S	45	1,5	90
92-007-566	D64S	50	1,5	90
92-007-567	D64S	56	2	90
92-007-568	D64S	63	2	90
92-007-584	D64S		Set	

Set of dressing tools comprising 10 dressing tools in workshop-type wooden box

Dressing tools Ø 25-50 mm DIN 58741-5 (Ø 25 x 42)
SPS 55

Part number	specification	DL	R	L
92-007-560	D64S	25	1,5	90
92-007-561	D64S	28	1,5	90
92-007-562	D64S	30	1,5	90
92-007-563	D64S	32	1,5	90
92-007-564	D64S	36	1,5	90
92-006-434	D64S	40	1,5	90
92-007-565	D64S	45	1,5	90
92-007-566	D64S	50	1,5	90
92-008-377	D64S		Set A	

Set of dressing tools comprising 8 dressing tools in work-shop-type wooden box

Dressing tools Ø 71-125 mm DIN 58741-5 (Ø 25x42)
SPS 60/140/150/ Diamond tools are available with other diameters and specifications on request 200

Part number	specification	DL	R	L
92-010-629	D91S	71	2	90
92-010-631	D91S	80	2	90
92-010-632	D91S	90	2,5	90
92-010-633	D91S	100	2,5	90
92-010-634	D91S	110	2,5	90
92-010-635	D91S	125	2,5	90
92-010-636	D91S		Set	

Set of dressing tools comprising 6 dressing tools in work-shop-type wooden box

Diamond tools are available with other diameters and specifications on request

CENTERING WHEELS

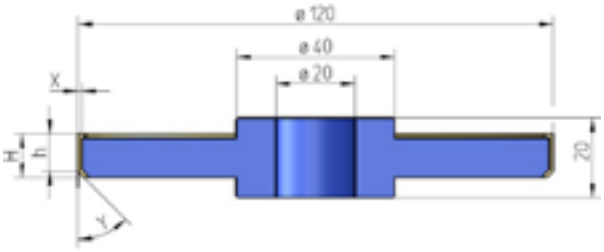

Diamond centering wheel Ø 120 DIN 58742 CM-2 / C-50

Part number	specification	H	h	X	Y
92-010-752 (92-005-066)	1 cylinder part dia. 120 x 8 mm, D46/C90/BZ183 1 bevel section 45°/D25/C90/BZ183 and 1 bevel section 90°/D25/C90/BZ183	10	8	1	45
92-010-753 (92-005-067)	1 cylinder part dia. 120 x 4 mm, D30/C90/BZ183, 1 bevel section 45°/D25/C135/BZ183 and 1 bevel section 90°/D25/C135/BZ183	5	4	1	45

Centering wheels are available in other diameters and specifications on request

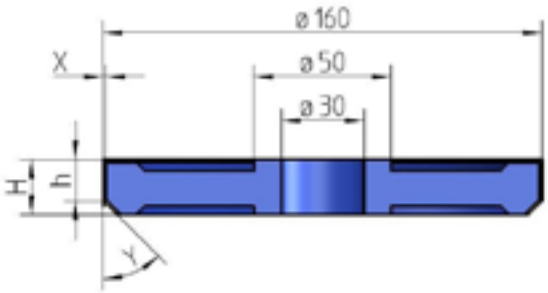

Diamond centering wheel Ø 160 DIN 58742 C-2 / C-300

Part number	specification	H	h	X	Y
92-010-754 (92-005-065)	1 cylinder part dia. 160 x 20/15 mm, D46/C90/BZ183, 1 bevel section 45°/D46/C135/BZ183 and 1 bevel section 90°/D46/C135/BZ183	20	15	1	45
92-010-755 (92-005-064)	1 cylinder part dia. 160 x 20/15 mm, D46/C90/BZ183, 1 bevel section 45°/D30/C135/BZ183 and 1 bevel section 90°/D30/C135/BZ183	20	15	1	45

Centering wheels are available in other diameters and specifications on request

COOLANT MANIFOLD

Satisloh offers suitable coolant feeds with customized geometry to each centering wheel. Coolant feeds are available on request

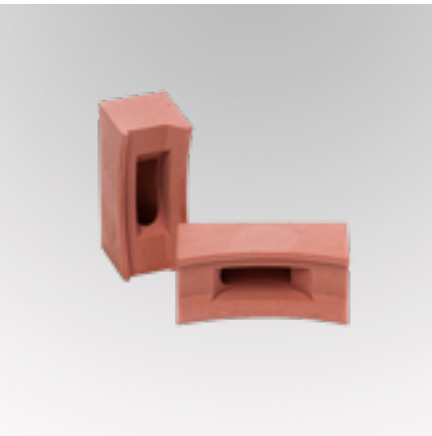

Part number	specification
05-059-343	Replacement coolant manifold suitable for 92-005- 065 and 92-005-064 right side installation, bevel section top
05-059-279	Replacement coolant manifold suitable for 92-005- 065 and 92-005-064 left side installation, bevel section bottom
05-064-887	Replacement coolant manifold for centering wheels dia. 180 right
05-064-886	Replacement coolant manifold for centering wheels dia. 180 left

DRESSING STONES

Dressing tool for C-300

Part No.	Description	Specification
02-078-431	Dressing tool with Hyd.25x42 for diamond tool with dressing stone ø80x30 SC9 500 H10 RE REI	For grit size D15-D46
02-078-432	Dressing tool with Hyd.25x42 for diamond tool with dressing stone ø80x30 SC9 320 K10 RE REI	For grit size D46-D76
02-078-433	Dressing tool with Hyd.25x42 for diamond tool with dressing stone ø80x30 SC9 180 L10 RE REI	For grit size D76

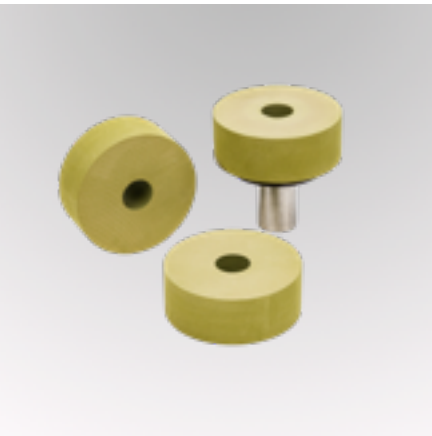

Dressing Stones for C-50

Part No.	Description	Specification
02-080-574	Dressing tool with Hyd.12x25 for diamond tool with dressing stone ø40x25 SC9 500 H R REI	For grit size D15-D46
75-051-454	Dressing Stone ø40x25 SC 9 500 H10 R REI (can be ordered with customer-specific holders on request)	For grit size D15-D46
75-051-455	Dressing Stone ø40x25 SC 9 180 L10 RE REI (can be ordered with customer-specific holders on request)	For grit size D76

Dressing tool for SPM-125 / 140 / 150 / 200

Part No.	Description	Specification
02-078-864	Dressing tool with Hyd.25x42 for diamond tool with dressing stone ø80x30 SC9 500 H10 RE REI	For grit size D15-D46
02-078-865	Dressing tool with Hyd.25x42 for diamond tool with dressing stone ø80x30 SC9 320 K10 RE REI	For grit size D46-D76
02-078-867	Dressing tool with Hyd.25x42 for diamond tool with dressing stone ø80x30 SC9 180 L10 RE REI	For grit size D76

Dressing Stones for C-300 / SPM-125 / 140 / 150 / 200

Part No.	Description	Specification
75-051-410	Dressing Stone ø80x30 SC9 500 H RE REI	For grit size D15-D46
75-051-412	Dressing Stone ø80x30 SC9 320 K10 RE REI	For grit size D15-D46
75-051-411	Dressing Stone ø80x30 SC9 180 L10 RE REI	For grit size D76

ASPHERE TOOLS

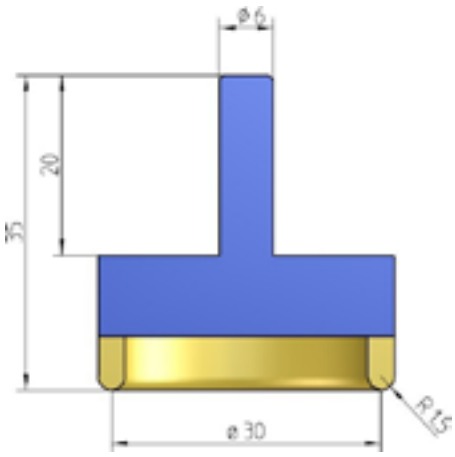

Diamond cup-tools for aspheres SPM 50

Part No.	specification
92-015-113	Diamond tool for pre-grinding- cup mode TS 30 / D46- BZM- C50
92-015-114	Diamond tool for fine-grinding- cup mode TS 30 / D15- BZM- C50
92-015-115	Diamond tool for fine-grinding- cup mode TS 30 / D18 – KB53 – C90

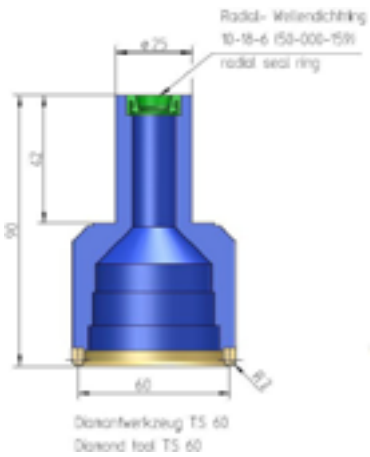

Diamond cup-tools for aspheres SPM 60/140/150/200

Part No.	specification
92-008-248	Diamond tool for pre-grinding- cup mode TS 60 / D46- BZM- C50
92-008-249	Diamond tool for fine-grinding- cup mode TS 60 / D15- BZM- C50

Diamond tools are available with other diameters and specifications on request

ASPHERE TOOLS

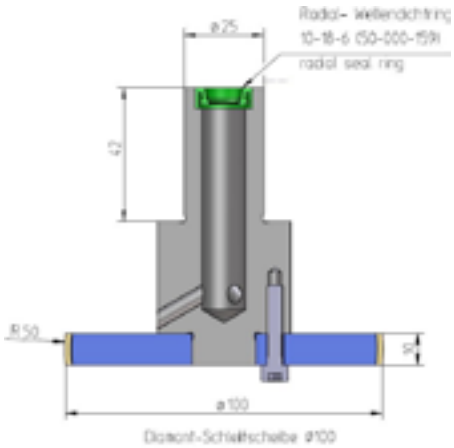

Diamond grinding wheel for aspheres SPM- 60/140/150/200

Part No.	specification
92-008-252	Diamond grinding disc for finest grinding- disc mode Ø 100,0 mm / D15- BZM- C50 with flange
92-008-253	Diamond grinding disc for finest grinding- disc mode Ø 100,0 mm / D18- KB53/A- C90 with flang
92-011-466	Diamond grinding disc for pre grinding-disc mode Ø 100 D46 BZM C50 with flange
92-012-084	Diamond grinding disc for finest grinding- disc mode Ø 100,0 mm / D18- KB53/A- C90 without flange
92-015-388	Diamond grinding disc for finest grinding- disc mode Ø 120x10 mm / D18- KB53/A- C90 with flange
92-015-389	Diamond grinding disc for finest grinding- disc mode Ø 120x5 mm / D18- KB53/A- C90 with flange

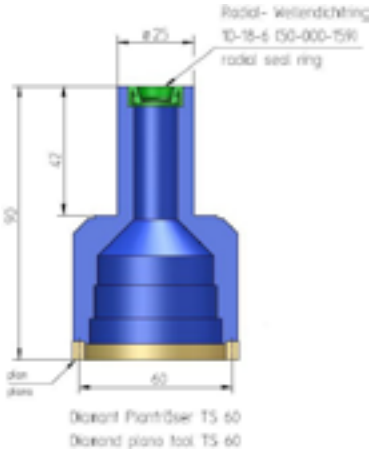

Diamond Plano-tool for aspheres SPM 60/140/150/200

Part No.	specification
92-008-254	Diamond plano tool for finest grinding- cup mode (off-axis) TS 60 / D18- KB53- C90

Diamond tools are available with other diameters and specifications on request

BALL SEGMENT TOOLS

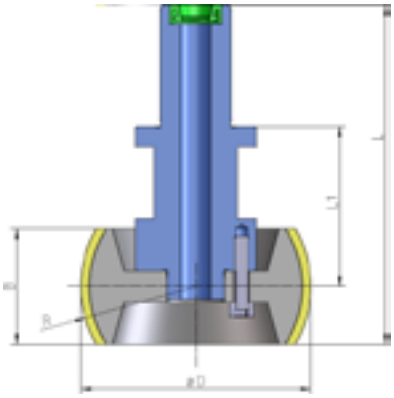

Ball segment tool dia. 100

Part No.	specification	D	R	B	L	L1
92-011-090	MDT-629 RS D15 C100	100	50	40	117,5	55,5
92-011-091	D15 BZM C100	100	50	40	117,5	55,5
92-011-092	D46 BZM C60	100	50	40	117,5	55,5
92-011-093	D91 BZM C60	100	50	40	117,5	55,5
92-011-094	D126 BZM C60	100	50	40	117,5	55,5

Ball segment tool dia. 80

Part No.	specification	D	R	B	L	L1
92-011-078	MDT-629 RS D15 C100	80	40	40	117,5	55,5
92-011-079	D15 BZM C100	80	40	40	117,5	55,5
92-011-088	D46 BZM C60	80	40	40	117,5	55,5
92-011-089	D91 BZM C60	80	40	40	117,5	55,5
92-011-080	D126 BZM C60	80	40	40	117,5	55,5

Ball segment tool dia. 50

Part No.	specification	D	R	B	L	L1
92-011-081	MDT-629 RS D15 C100	50	25	40	117,5	55,5
92-011-082	D15 BZM C100	50	25	40	117,5	55,5
92-011-095	D46 BZM C60	50	25	40	117,5	55,5
92-011-083	D91 BZM C60	50	25	40	117,5	55,5
92-011-096	D126 BZM C60	50	25	40	117,5	55,5

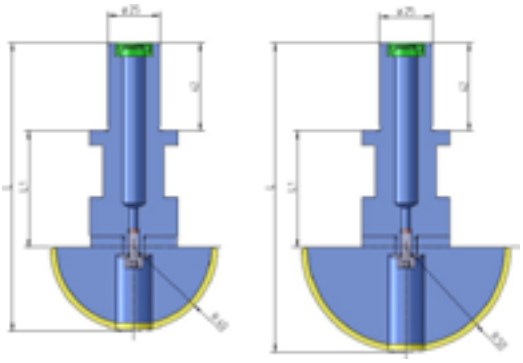

Ball segment tool dia. 100

Part No.	specification	D	R	L	L1
92-011-498	MDT-629 RS D15 C100	100	50	147,5	55,5
92-011-499	D15 BZM C100	100	50	147,5	55,5
92-011-500	D46 BZM C60	100	50	147,5	55,5
92-011-501	D91 BZM C60	100	50	147,5	55,5
92-011-502	D126 BZM C60	100	50	147,5	55,5

Ball segment tool dia. 80

Part No.	specification	D	R	L	L1
92-011-503	MDT-629 RS D15 C100	80	40	137,6	55,5
92-011-504	D15 BZM C100	80	40	137,6	55,5
92-011-505	D46 BZM C60	80	40	137,6	55,5
92-011-506	D91 BZM C60	80	40	137,6	55,5
92-011-507	D126 BZM C60	80	40	137,6	55,5

BALL SEGMENT TOOLS

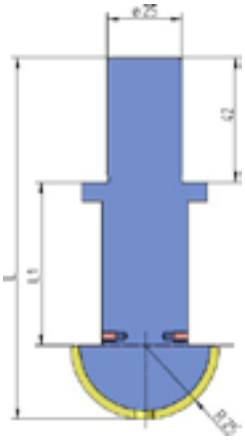

Ball segment tool dia. 50

Part No.	specification	D	R	B	L
92-011-510	MDT-629 RS D15 C100	50	25	122	55
92-011-511	D15 BZM C100	50	25	122	55
92-011-512	D46 BZM C60	50	25	122	55
92-011-513	D91 BZM C60	50	25	122	55
92-011-514	D126 BZM C60	50	25	122	55

Part No.	specification
92-016-547	Ball segment tool R=40 D15 BZW C50 L=117
35-001-540	scrub screw DIN 913 M5x8 V2A
92-015-919	Ball segment tool T70 D15-BZM-C50 L=117
92-015-928	Ball segment tool T70 D181-BNX-C50 L=117

COMBI TOOLS HYD.25X42

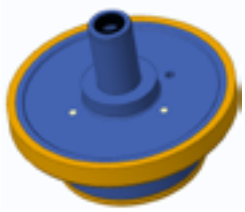

92-015-827

Part No.	Consisting of
92-015-826	Combitool TS 80 D91 BZW C50
92-015-825	Combitool wheel Ø130 D64 BZW C90

92-016-839

Part No.	Consisting of
92-016-837	Combitool TS 80 D151 BZW C35
92-016-838	Combitool wheel Ø130 D107 BZW C60

92-016-844

Part No.	Consisting of
92-016-843	Combitool TS 80 D20 BZW C23
92-016-840	Combitool wheel Ø130 D46 BZW C75

92-016-846

Part No.	Consisting of
92-016-843	Combitool TS 80 D151 BZW C35
92-016-845	Combitool wheel Ø130 D107 BZW C60

92-016-842

Part No.	Consisting of
92-016-841	Combitool TS 80 D54 BZW C30
92-016-840	Combitool wheel Ø130 D46 BZW C75

PRISM TOOLS

Diamond tools for prism grinding PR-150

Part No.	specification	OD	ID
92-001-670	D91 C35 BZW	100	90
92-001-669	D91 C35 BZW	100	70
92-014-932	D46 C35 BZW	76	40
92-010-834	D46 C35 BZW	50	40

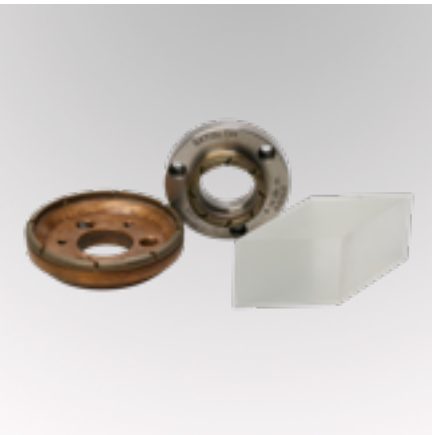

COLLET CHUCK HOLDER

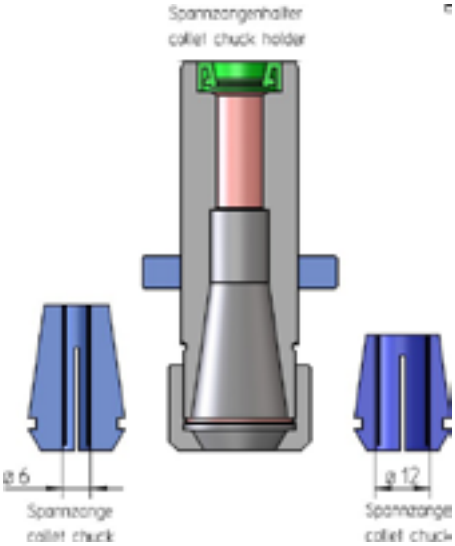

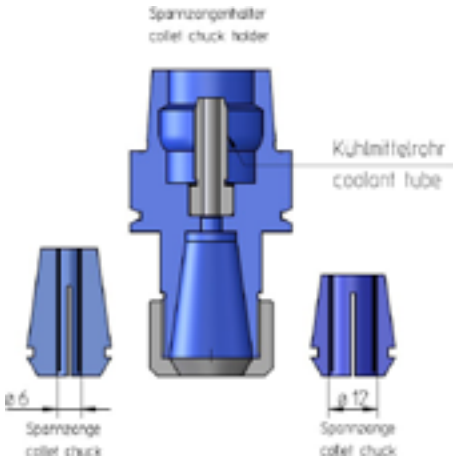

Collet chuck holder Hyd. 25 x 42 Part Number: 02-051-168

Part No.	Spare parts
05-051-868	Collet chuck holder single
60-052-246	Collet chuck dia.12
60-052-266	Collet chuck dia.6
60-052-247	Union nut
50-000-159	Seal ring

Collet chuck holder HSK-40 Part Number: 02-054-071

Part No.	Spare parts
60-052-726	Collet chuck holder HSK-40 E
60-052-246	Collet chuck dia.12
60-052-266	Collet chuck dia.6
75-000-673	Coolant tube
60-052-247	Union nut

TOOL ADAPTER HYD.25X42

Tool Adapter for diamond grinding tools Hyd. 25 x 42

Part No.	D	L1	L2	TK- Ø
05-016-586	28	50	60	40
05-051-166	28	100	110	40
05-016-585	35	52	62	55
05-016-229	50	54	66	75

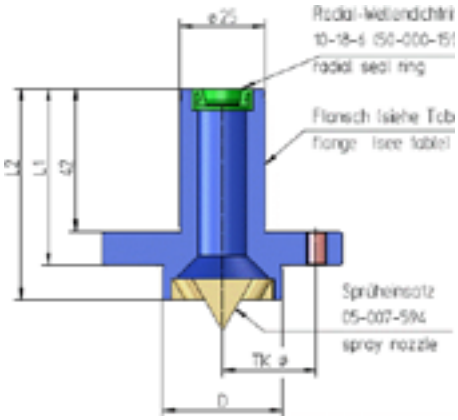

Tool Adapter for grinding wheels Hyd. 25 x 42

Part No.	D	L1	L2	L3	TK- Ø
05-019-047	20	28	88	15	32
05-063-102	20	35	87	10	32
05-052-934	20	50	92	15	32
901.106.267	20	51	101	8	32
05-019-520	20	55	87	10	32
05-056-848	20	65	117	10	32
901.106.243	20	89	140	9	32
05-061-524	20	100	150	8	32
05-018-711	20	100	152	10	32
05-061-713	20	120	172	10	32
05-019-040	20	140	196	14	32

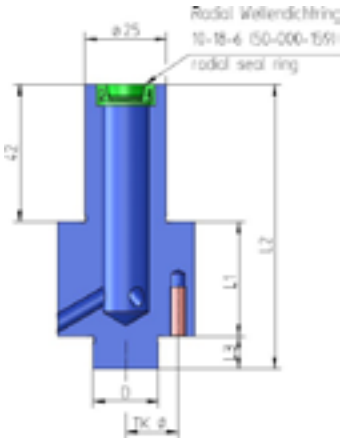

Part No.	Spare parts
02-061-765	Tool Adapter for drilling tools Hyd. 25 x 42

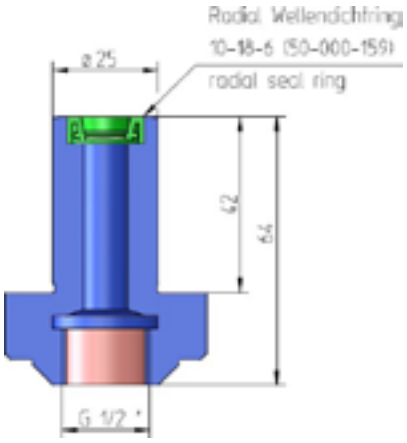

TOOL ADAPTER HYD.25X42

Part No.	Spare parts	L1	L2
05-054-880	Tool Adapter for scooping tools Hyd. 25 x 42	61,2	75,2

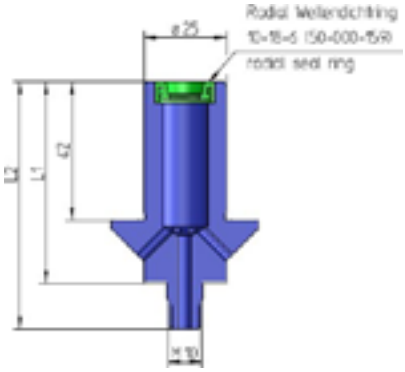

Part No.	Spare parts
05-069-657	Tool Adapter for Ball segment tools dia.100 & dia.80

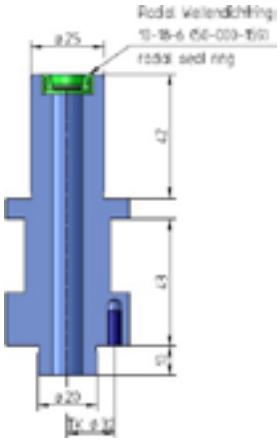

Part No.	Spare parts
05-069-194	Tool Adapter for Ball segment tools SPM-200 (Spindle 5)

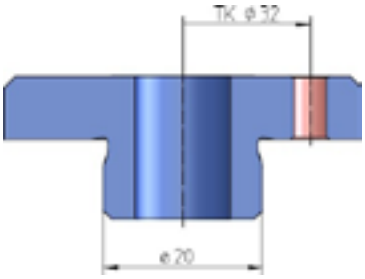

TOOL ADAPTER HSK-40

Tool Adapter for diamond grinding tools HSK-40 E

Part No.	D	L1	L2	L3	TK- Ø
05-016-134	28	75	45	10	40
05-016-135	35	75	45	10	55
05-016-136	50	80	48	12	75

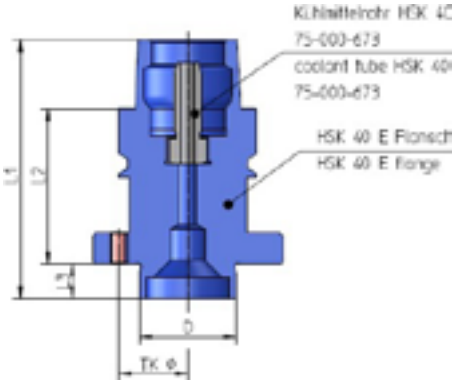

Tool Adapter for grinding wheels HSK-40 E

Part No.	D	L1	L2	L3	L4	TK- Ø	for tool changer
05-077-016	20	75	85	105	10	32	x
05-019-418	20	82	92	112	10	32	x
05-019-237	20	95	105	125	10	32	
05-019-401	20	95	95	125	10	32	x
05-061-334	20	105	115	135	10	32	
05-076-620	20	109,5	120	140	10	32	x
05-077-165	20	120	130	150	10	32	x
05-077-178	20	140	150,5	170,5	10	32	x
05-061-338	20	140	150	170	10	32	

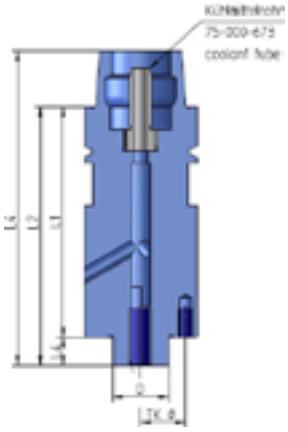

Tool Adapter for drilling tools HSK-40 E

Tool Adapter HSK-40 part number: 02-066-716

Part No.	Spare parts	Pos.
05-016-135	HSK-40 Adapter	1
75-000-673	Coolant tube	2
05-070-785	Connector	3
35-000-180	Screw M6x16	4 (3x)

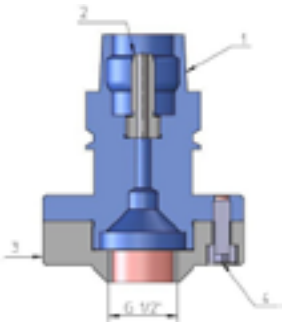

Tool Adapter for scooping tools HSK-40 E

Part No.	L1	L2
05-070-788	32	46,5
901.110.085	86	100,5

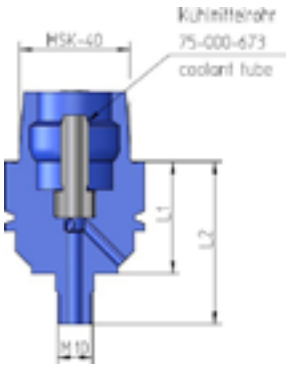

Accessories for tool Adapter HSK-40 E

Part No.	Description
75-000-673	Coolant tubes
75-000-675	Socket Wrench

TOOL ADAPTER FOR POLISHING TOOLS HYD.25X42

Tool adapter for polishing tools Hyd.25x42

Part No.	Material	TK- Ø
05-017-492	Stainless steel	38
05-053-911	Brass	38

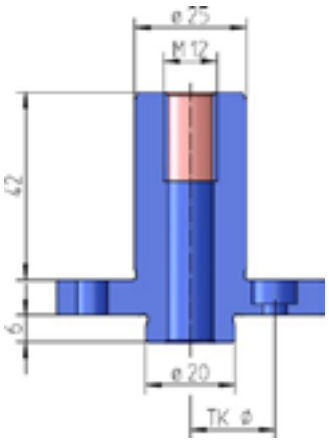

Tool Adapter for polishing tools extra height Hyd.25x42

Part No.	TK- Ø
05-063-021	38

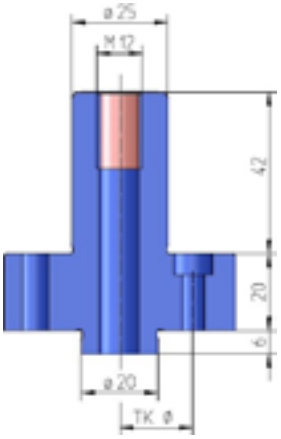

Spacer for polishing tools Hyd.25x42

Part No.	TK- Ø
05-062-959	38

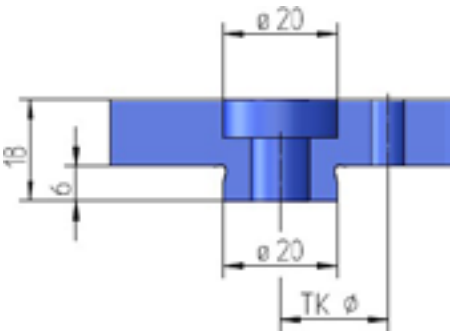

WORKPIECE CLAMPING SYSTEMS

SPM-10/30/50 Hydrodehn clamping chuck dia. 12x25
Hydrodehn clamping chuck 12x25
Part Number: 02-054-066

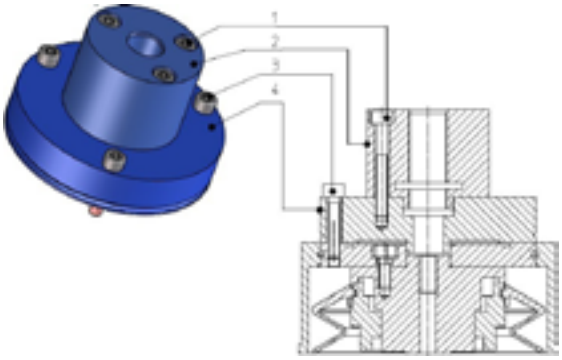

Part No.	Spare parts	Qty
35-000-167	Screw DIN 912 M4x30 V2A	3
60-000-316	Hydr. Clamping chuck dia. 12	1
35-001-422	screw DIN 912 M4x20 V2A	3
05-055-591	Cylinderflange for HD 60-000-316	1

Hydrodehn clamping chuck 12x25 with index pin
Part Number: 02-075-640

Part No.	Spare parts	Qty
35-000-167	Screw DIN 912 M4x30 V2A	3
60-053-500	Hydr. Clamping chuck dia. 12	1
35-001-422	screw DIN 912 M4x20 V2A	3
05-055-591	Cylinderflange for HD 60-000-316	1
35-055-619	Dowel Pin DIN7 3m6x10 V2A	

SPM-10/30/50Clamping chuck alignable, for clamping single lenses in aluminum or plastic collet chucks (Clamping chucks DIN 58739-3)

Clamping chuck alignable for collet chucks
Part Number: 02-065-482

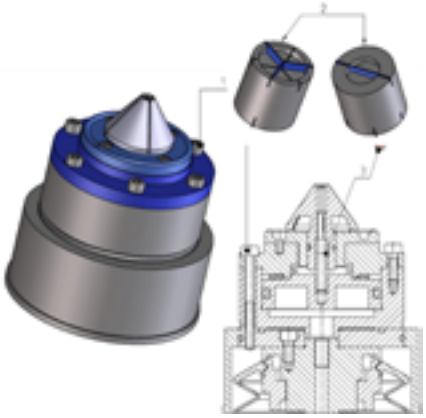

Part No.	Spare parts	Qty
35-001-503	Screw DIN 912 M4x40 V2A	8
02-002-540	Collet chuck key	1
35-001-577	Scrub screw DIN 913 M5x16 V2A	1

SPM-10/30/50 clamping chuck alignable, for clamping large rod lenses and single lenses (without collet chcuck)

Collet chuck TYP B8-72-137 max. dia.10

Clamping chuck alignable for big rod lenses & single lenses
Part Number: 02-005-151

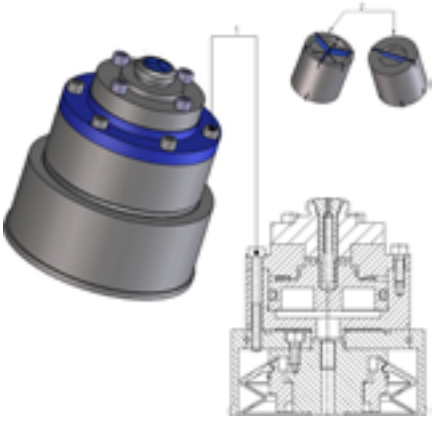

Part No.	Spare parts	Qty
35-001-503	Screw DIN 912 M4 x 40 V2A	8
02-002-540	Collet chuck key	1

WORKPIECE CLAMPING SYSTEMS

SPM-10/30/50 clamping large rod lenses and single lenses (without collet chuck)

D=15 Collet chuck TYP B15-72-139 max. dia.15

Clamping chuck alignable for big rod lenses & single lenses
Part Number: 02-005-152

Part No.	Spare parts	Pos.
35-001-503	Screw DIN 912 M4 x 40 V2A	8
02-002-540	Collet chuck key	1

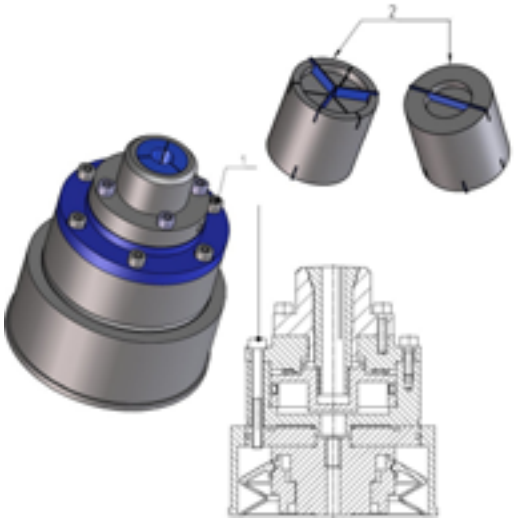

SPM-10/30/50 Clamping chuck alignable, for clamping cementing chucks and large rod lenses

Clamping chuck allignable for cementing chucks and large rod lenses
Part Number: 02-005-150

Part No.	Spare parts	Pos.
35-001-503	Screw DIN 912 M4 x 40 V2A	8
35-000-737	Grub screw M5 x 6 V2A	1
35-001-668	Grub screw M5 x 16 V2A	1
05-010-517	Collet chuck dia. 12	1

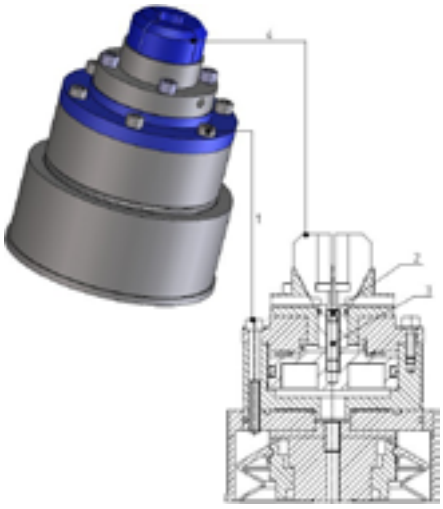

SPM-10/30/50, C-50 3 Jaw precision clamping chuck for rocl lenses and cementing chucks

For High precision clamping – tasks in micro range Concentricity 2 µm

Accessories: Grease gun: 60-054-907 / Grease: 90-055-630

Part No.	Spare parts	Pos.
35-001-503	Screw DIN 912 M4 x 40 V2A	8
35-000-737	Grub screw M5 x 6 V2A	1
35-001-668	Grub screw M5 x 16 V2A	1
05-010-517	Collet chuck dia. 12	1

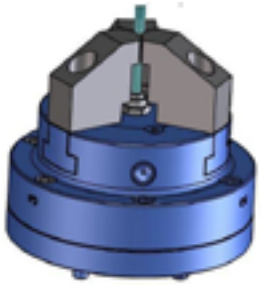

WORKPIECE CLAMPING SYSTEMS

SPM-10/30/50 clamping chuck for vacuum receptions (DIN 58739-1) for loose lenses

Clamping chuck for vacuum receptions for loose lenses
Part Number: 02-002-667

Part No.	Spare parts	Qty
35-001-487	Cylinder pin DIN 7 2m6 x 10 V2A	1
35-001-488	Scrub screw DIN 913 M4 x 8 V2A	1
35-000-171	Screw DIN 912 M4 x 10 V2A	4

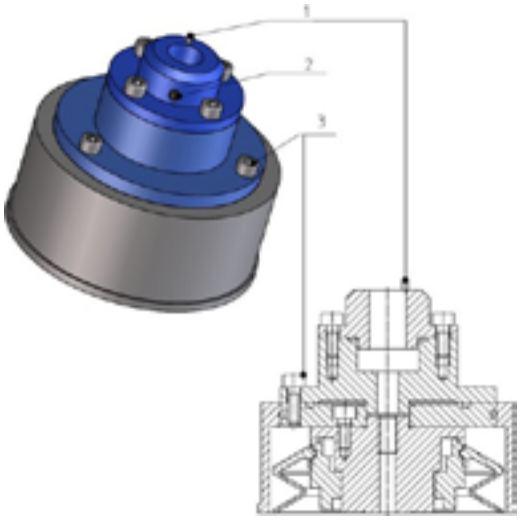

SPM-55 plano plate for clamping chucks or vacuum chucks

Mechanical or vacuum clamping for work piece

Part No.	Spare parts	Qty
35-001-474	Screw DIN 912 M8 x 16 V2A	6
35-000-646	Scrub screw DIN 913 M4 x 5 V2A	6
05-017-757	Base plate	1

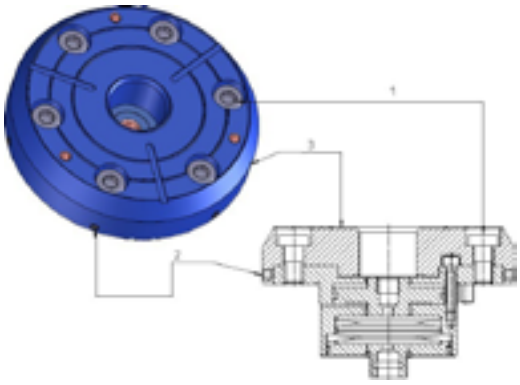

SPM-60/140/200 Combination chuck system, hydro expansion chuck 25x42 (DIN 58741-2), integrated plano plate for collet chucks (DIN 58739-3), vacuum chucks (DIN58739-1) and cementing chucks.

Combination chuck system hydro expansion chuck & integrated plano plate
Part Number: 02-051-677

Part No.	Spare parts	Qty
35-000-188	Screw DIN 912 M6 x 30 V2A	6
05-018-758	Adapter vacuum chuck	1
50-000-025	O-Ring 14 x 2	1
50-000-450	O-Ring 12 x 1, 5	1
05-018-757	Adapter collet chuck	1
60-000-367	Hydrodehn expansion chuck 25x42	1

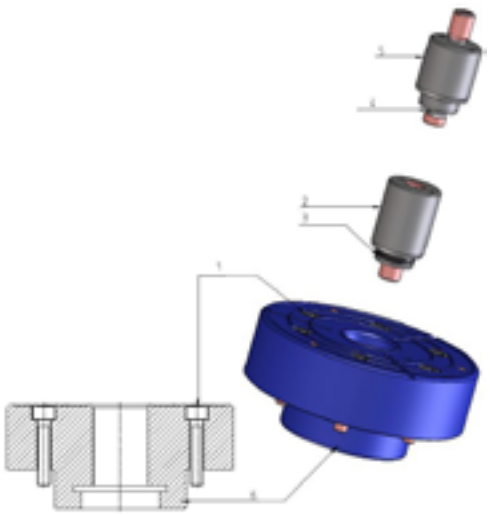

WORKPIECE CLAMPING SYSTEMS

SPM-140/200 Increasing workpiece reception for combination chuck

Increasing workpiece reception for combination chuck
Part Number: 02-055-885

Part No.	Spare parts	Qty
05-055-446	Adapter	1
50-000-025	O-Ring 14 x 2	1
05-057-680	Adapter vacuum chuck	1
50-000-450	O-Ring 12 x 1,5	1
05-057-679	Adapter collet chuck	1
35-000-181	Screw DIN 912 M6 x 20 V2A	6

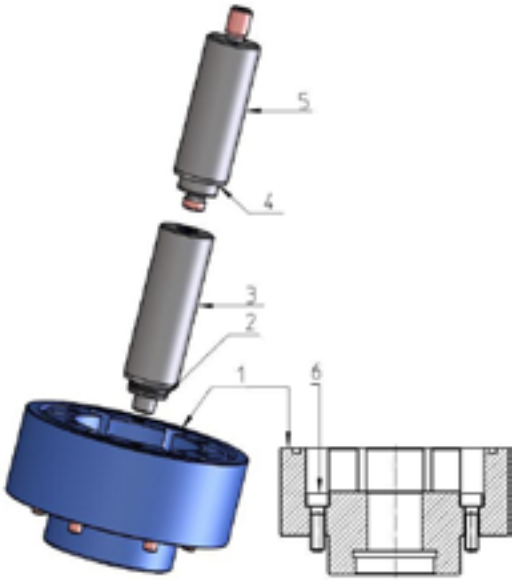

SPM-125/-150 Mechanical or vacuum clamping for work piece

Combination chuck system hydro expansion chuck & integrated plano plate
Part Number: 02-061-718

Part No.	Spare parts	Qty
35-000-188	Screw DIN 912 M6 x 30 V2A	6
05-018-758	Adapter vacuum chuck	1
50-000-025	O-Ring 14 x 2	1
50-000-450	O-Ring 12 x 1,5	1
05-018-757	Adapter collet chuck	1
05-063-997	Support plate	1

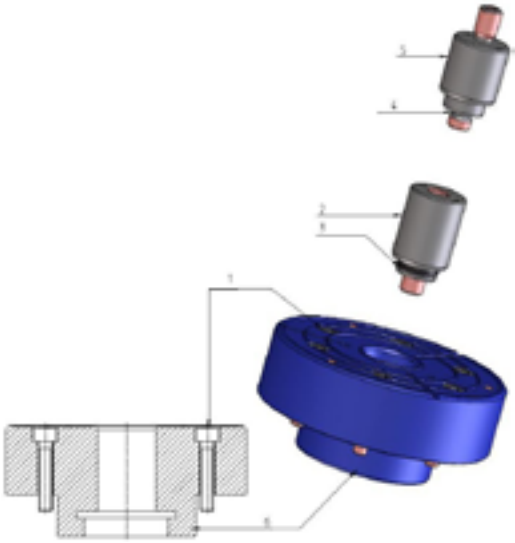

SPM-125/-150 Hydro expension chuck 25x42

Hydro expansion chuck 25x42
Part Number: 02-061-719

Part No.	Spare parts	Qty
35-000-188	Screw DIN 912 M6 x 30 V2A	6
50-000-025	O-Ring 14 x 2	1
60-053-740	Hydro Expension chuck	1

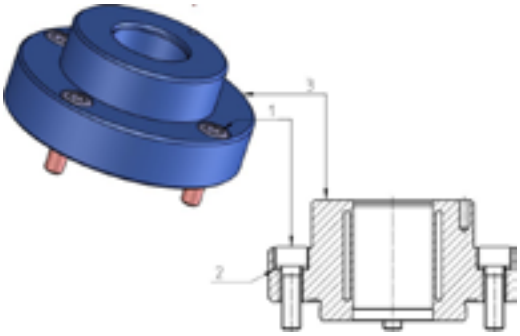

HYDRO EXPANSION CHUCK

Hydro expansion chuck 12x25

Part number: 60-000-316

Screw DIN 912 M4 x 30 V2A

Part No. DIN 912 M4 x 30	Machine	Tool spindle above	Work piece spindle below	Qty
35-000-167	CM-2	X	X	3
35-000-167	C-50	X	X	3
35-000-167	SPM-30		X	3
35-000-167	SPS-30	X		3
35-000-167	SPM-10		X	3

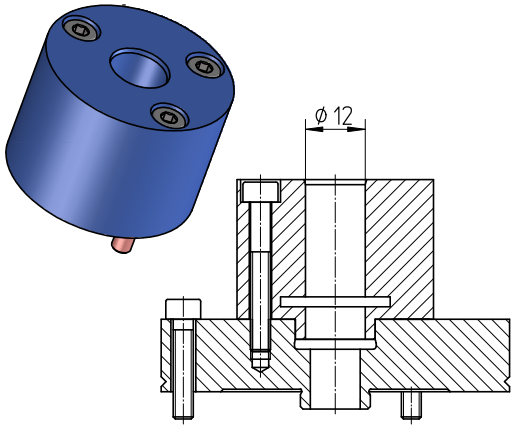

Hydro expansion chuck 25x42 with Indexpin

Part number: 60-000-281

Part No. DIN 912 M5 x 45	Machine	Tool spindle above	Work piece spindle below	Qty
35-001-606	C-2	X	X	3
35-001-606	C-300	X	X	3

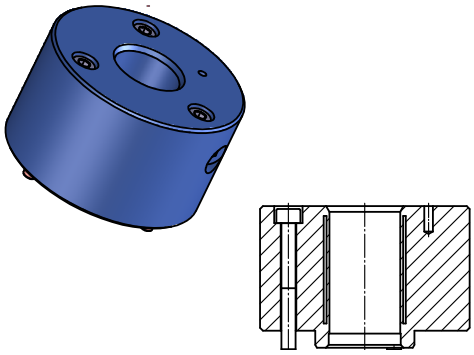

Hydro expansion chuck 25 x 42

Part number: 60-000-367

Part No. DIN 912 M6 x 30	Machine	Tool spindle above	Work piece spindle below	Qty
35-000-188	SPM-60		X	6
35-000-188	SPM-140		X	6
35-000-188	G-II		X	6
35-000-188	SPM-200		X	6

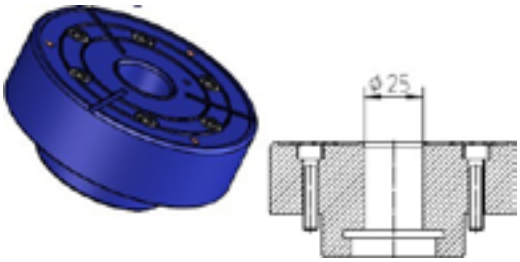

Hydro expansion chuck 25 x 42

Part No. DIN 912 M6 x 20	Machine	Tool spindle above	Work piece spindle below	Qty
35-000-181	SPM-125	X		4
35-000-181	SPS-125	X	X	4
35-000-181	SPM-150	X		4
35-000-181	SPS-150	X	X	4

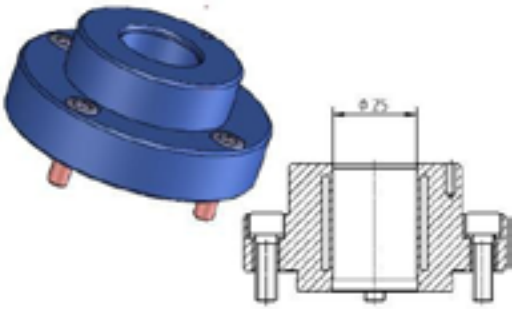

BUSHING FOR HYDRO EXPANSION CHUCK

Part No.	DA	DI
60-000-275	12	6
60-000-263	25	8
60-000-254	25	12
60-055-972	25	6
60-056-219	40	25
60-052-134	40	12

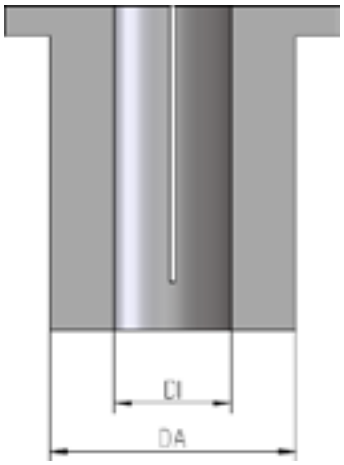

MEASURING DEVICES FOR HEIGHT MEASURMENT

Gauges for measuring heights of tools
SPX-50, SPX-30, SPX-10

Part Number: 02-002-313

Part No.	Spare parts
05-003-131	Receiving part
05-008-955	Measuring adapter for 12H7
05-008-956	Measuring adapter for 6H7
05-008-997	Measuring adapter for M10
05-015-140	Adjustment bell DA10 DI7,4
05-008-999	Adjustment bess DA15 DI10
05-014-106	Setting bolt DA8
35-901-284	Screw DIN84 M2,5x8
65-000-006	Dial gauge M2/30T D58 30mm
65-000-070	Measuring table MT50

Gauges for measuring heights of tools
SPX-55/60/125/140/150/200

Part Number: 02-001-606

Part No.	Spare parts
05-008-089	Measuring piece
05-008-090	Plate
05-008-091	Measuring bell
05-008-092	Measuring bell for measuring device
05-003-131	Receiving part
35-901-284	Screw DIN 912 M;2,5x8
65-000-095	Measurint table
65-000-096	Gauge GM 800/100T 0,01

Gauges for measuring heights of tools GI

Part Number: 02-005-716

Part No.	Spare parts
05-008-090	Plate
05-008-091	Measuring bell
05-016-553	Measuring piece
35-901-284	Screw DIN 912 M2,5x8
65-000-096	Gauge GM 800/100T 0,01
65-000-172	Measuring table

MEASURING DEVICES FOR HEIGHT MEASURMENT

Part No.	Clock gauge	Graduation	Travel
65-000-066	Millimess 1003	0,001 mm	2,5 mm

Part No.	Clock gauge	Graduation	Travel
65-000-005	MU 52 ST 8	0,01 mm	10 mm

Part No.	Clock gauge	Graduation	Travel
65-000-096	GM 80/100	0,01 mm	100 mm

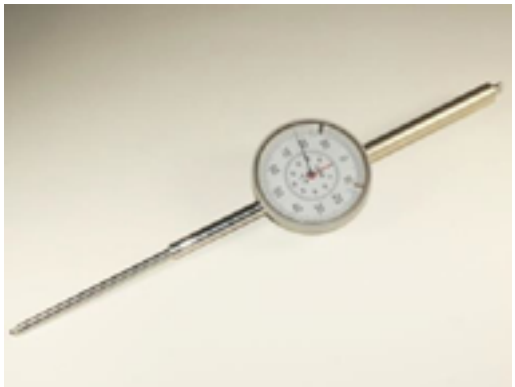

All technical data subject to change without notice. Verify details with Satisloh.

CONTACT

Satisloh AG
Neuhofstrasse 12
CH- 6340 Baar
Switzerland
Phone: +41 (0) 41766 16 16
Mail: info@satisloh.com

www.satisloh.com

		Sales	Service
North America	**Phone:**	+1 262 255 6001	+1 262 255 6001
	Email:	precision@satislohusa.com	hotlinefeinoptik@satisloh.com
Europe	**Phone:**	+49 (0) 6441 912 0	+49 (0) 6441 912 555
	Email:	info.de@satisloh.com	hotlinefeinoptik@satisloh.com
Asia	**Phone:**	+852 27 56 7711	+852 27 56 7654
	Email:	info.asia@satisloh.com	service.asia@satisloh.com
Middle & South America	**Phone:**	+55 (11) 2930 8600	+55 (11) 2930 8600 (pt) +57 300 798 3374 (es)
	Email:	info.latam@satisloh.com	service.latam@satisloh.com

satisloh®

© Satisloh / KH / September 2026